# The prototype design of more powerful Exoplanet Tracker based on LAMOST

Kai Zhang [*a, b, c], Yongtian Zhu [a, b], Lei Wang [a, b]

[a] National Astronomical Observatories/Nanjing Institute of Astronomical Optics & Technology, Chinese Academy of Sciences, Nanjing 210042,China;

[b] Key Laboratory of Astronomical Optics & Technology, Nanjing Institute of Astronomical Optics & Technology, Chinese Academy of Sciences, Nanjing 210042,China;

[c] Graduate University of Chinese Academy of Sciences, Beijing 100049, China.

## ABSTRACT

Chinese national science project-LAMOST successfully received its official blessing in June, 2009. Its aperture is about 4m, and its focal plane of 1.75m in diameter, corresponding to a 5° field of view, can accommodate as many as 4000 optical fibers, and feed 16 multi-object low-medium resolution spectrometers (LRS). In addition, a new technique called External Dispersed Interferometry (EDI) is successfully used to enhance the accuracy of radial velocity measurement by heterodyning an interference spectrum with absorption lines. For further enhancing the survey power of LAMOST, a major astronomical project, Multi-object Exoplanet Survey System (MESS) based on this advanced technique, is being developed by Nanjing Institute of Astronomical Optics and Technology (NIAOT) and National Astronomical Observatories of China (NAOC), and funded by Joint Fund of Astronomy, which is set up by National Natural Sciences Foundation of China (NSFC) and Chinese Academy of Sciences (CAS). This system is composed of a multi-object fixed delay Michelson interferometer (FDMI) and a multi-object medium resolution spectrometer (R=5000). In this paper, a prototype design of FDMI is given, including optical system and mechanical structure.

**Keywords:** External Dispersed Interferometer, Fixed Delay Michelson Interferometer, Optical System, Mechanical Structure

## 1. INTRODUCTION

Since the discovery of a planet around 51Peg (Mayor & Queloz 1995), the number of known exoplanets has increased to more than 400 [1]. Due to the case that the total quantity of the discovered exoplanets is not enough and the observation bias caused by the threshold of modern techniques, at present, it is extremely difficult for astronomers to make a systematic analysis of exoplanet systems and therefore could not get a complete picture of them. Moreover, most of these exoplanets have been discovered by the radial velocity (RV) approach. In this approach, a high-precision and high-resolution spectrometer is the key instrument for detecting unknown exoplanets and further researching their chemical composition etc. But a small number of countries and organizations all over world can offer adequate developing funds to build more large-aperture telescope and high-resolution spectrometer. And the current popular 'one by one' observational mode, which only detects one object in one time, has been not regarded as the most efficient way to explore more exoplanets as soon as possible.

[*] kzhang@niaot.ac.cn; Phone: 86-25-85482281; Fax: 86-25-85405562.

Ground-based and Airborne Instrumentation for Astronomy III, edited by Ian S. McLean, Suzanne K. Ramsay, Hideki Takami, Proc. of SPIE Vol. 7735, 773510 · © 2010 SPIE · CCC code: 0277-786X/10/$18 · doi: 10.1117/12.856237

For thoroughly crossing this threshold, many great groups of astronomers and scientists all over the world challenged a series of incredible limit to develop the next generation telescope with both of large aperture and big field of view (FOV) and multi-object fiber spectrometer, such as SLOAN 2.5m telescope [2] and Chinese Large-sky-Area Multi-Object fiber Spectroscopy Telescope (LAMOST) [3]. At present, LAMOST has been technically the most powerful survey telescope because it has a 4m aperture and a 5° field of view can accommodate as many as 4000 optical fibers and 16 multi-object Low-medium Resolution Spectrometers (LRS) [4]. The number of fibers and spectrometers give us an overwhelming superiority in multi-object exoplanet exploration.

And astronomers also try to improve the current observational approach at the same time, e.g. a novel External Dispersed Interferometry (EDI) technique was invented by David J. Erskine in 1997 [5]. It can enhance the detecting ability of medium resolution spectrometer 2~6 times by adding a Fixed-Delay Michelson Interferometer (FDMI) before the spectrometer [6]. In 2002, Erskine, Jian Ge and their colleagues integrated a prototype of Exoplanet Tracker (ET) with KNPO 2.1m telescope. In 2005, a new exoplanet HD 102195b confirmed by ET on KNPO 2.1m telescope was named ET-1 to commemorate its first exoplanet detection [7]. After this success, Erskine and Jerry Edelstein proposed to develop a TripleSpec Exoplanet Discovery Instrument (TEDI) on the Palomar 200" telescope. It joins EDI with a medium-resolution, near IR (0.9-2.4um) echelle spectrograph, and is planed to observe cool stays [8]. At APO, Prof. Ge and his team in Florida University have successfully integrated two multi-object spectrometers, W. M. Keck Exoplanet Tracker, with SLOAN telescope by a big number of fibers [9]. This system has been included as a part of the SDSS III MARVELS action.

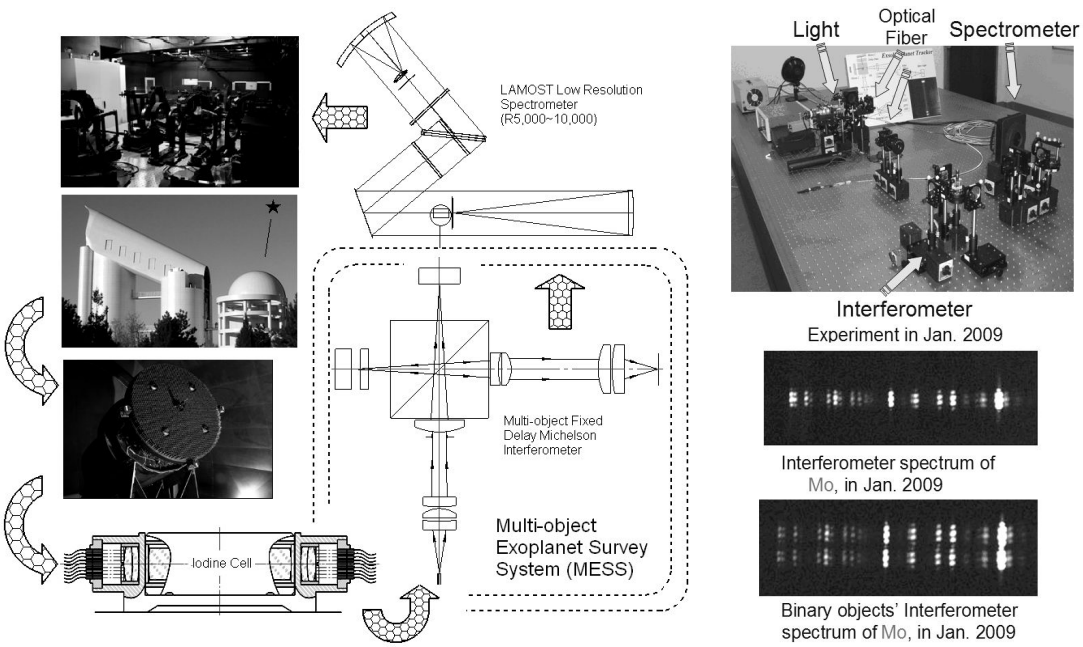


(a) (b)

Fig.1 Schematic drawing of MESS (a) and pictures of feasible experiment (b)

In China, this technique and its related instruments have been very impressive, although the newest and most decisive observational result has not been published. For further enhancing the survey power of LAMOST, a major astronomical project, which is developing a Multi-object Exoplanet Survey System (MESS), was strongly proposed by Nanjing

Institute of Astronomical Optics and Technology (NIAOT) and National Astronomical Observatories of China (NAOC) since 2008. And it has been also funded by Joint Fund of Astronomy, which is set up by National Natural Sciences Foundation of China (NSFC) and Chinese Academy of Sciences (CAS), since 2010. Obviously, it's predictable and credible that LAMOST will play more important role in the exoplanet exploration field after completing MESS. In the past pre-research time, a feasibility experimental platform has been built in the spectral lab. As a result of experiments, some interference spectrums covering 5,100-5,400 Å were obtained, as above shown.

## 2. DESIGN OF PROTOTYPE

### 2.1 Overall design

According to the EDI principle [10] [11], MESS is composed of a multi-object FDMI, a LRS and a new iodine cell component. Comparing to the original structure of LRS, the existing slit component will be replaced by FDMI. The focal plate of telescope is connected to the interferometer via the iodine cell by fibers and the output interfering beam directly transmits into spectrometer through the slit. Finally, the interference spectrum will be imaged on the CCD, as figure 1(b). The FDMI is required to be not only an achromatic thermostable interferometer with a fixed delay and a big viewing field, but also have multi-object function that simultaneously produce the same interference for all fibers. The existing LRS works in medium-resolution mode is a multi-fiber VPH grating spectrometer with 250 fibers and two detecting parts (Red and Blue arm). The spectral resolution is about 5,000 covering 5,100-5,400 Å (Blue arm) and 8,300-8,900 Å nm (Red arm) respectively. And spectrum in different arm is separately imaged by a corresponding 4K×4K CCD camera. Due to the insertion of FDMI, the interference spectrum is a 2-dimension spectral pattern, including slit and dispersion directions. In order to resolute 3~5 fringes along the slit direction, the number of fibers per MESS decreases from 250 to 30 at most. Each spectrum occupies 80~90 pixels along the slit direction on the CCD.

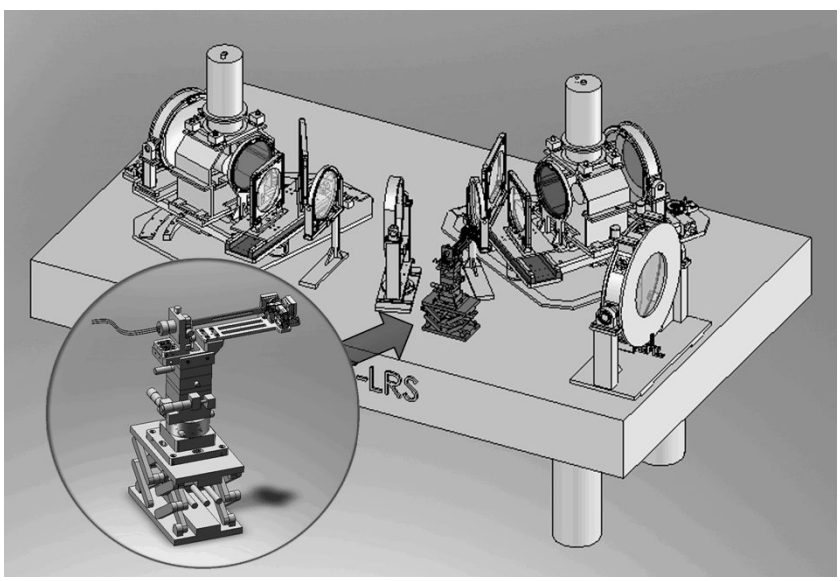


Fig.2 Overall structure of triple-object MESS prototype

Since some else limits in the design process have to be actually faced except the own EDI technique, a triple-object FDMI prototype is firstly developed for smoothly developing this project, as figure (2). At present, the model shown in the figure is in the assembly step. The most important design problems contain:

(1) Central obscuration. Due to the case that the spectrometer structure is an on-axial reflective type, the slit component is located in the center of ray path. When replaces the existing slit with FDMI, it is inevitable that central obscuration should be more serious.

(2) The original arc-shaped slit accommodates 250 fibers is a key component for good image quality. So it's difficult to finish the distribution of all output beams from FDMI in the same arc shape.

After analysis, an array-type structure is suggested as multi-object FDMI prototype's scheme instead of the original slit. Each fiber connecting to telescope possesses a correspondently FDMI subsystem but a certain central obscuration has to be accepted. In view of the design of EDI instruments, the using of cylindrical lens is still followed for obtaining the different spot sizes along the slit direction and the dispersion direction. In addition, the other parameters of this interferometer are required to suit for LRS, as follow shown.

Table.1 Parameter comparison between LRS and the requirement of FDMI

| LAMOST LRS | | Multi-object FDMI | |
|---|---|---|---|
| Number of LRS | 16 | Number of FDMI | 16 |
| Number of fibers | 250 per Spec. | Number of subsystem | ~ 30 per Inter. |
| F number of Incident Ray | 4 | F number of Emergent Ray | 4 in dispersed direction; >4 in slit direction. |
| Wave band | 5,100~5,400 Å (Blue Arm) | Wave band | 5,000~5,500 Å |
| Fibers' Number | 250 per Spec. | Fibers' Number | >30 per Spec. |
| Fiber's Size | ϕ 0.32mm (3.3") | Fiber's Size | ϕ 0.32mm (3.3") |
| Slit Structure | Arc Shape; Radii=691mm; Height=144mm. | Overall Structure | Simulate Slit's Structure |
| Width of Slit | 0.32mm; 0.16mm(Limited) | Size of spot on Slit | 0.32mm in Dispersed Direction; ~2.9mm in Slit Direction |
| Location of Slit | Center of Collimating Beam Vignetting Factor: ~5% | Location of FDMI | Center of Collimating Beam Vignetting Factor: <20% |

## 2.2 Optical System

Arc-shaped requirement makes the optical design difficult, and the lens aperture is limited by the actual fabricating condition in China. And it's also difficult and expensive for each subsystem to produce a small interference component. So the arc-shaped distribution is ignored in optical design, but considered in mechanical design (Detail shown in the section 2.3). Considering the assembly difficulty, a modular design was adopted for separating the integral FDMI into ~10 modules. Each module possesses three identical subsystems and a shared interference component. It's good for the using of cylindrical lens and Beam Splitter (BS). An unusual asymmetric optical system is given to avoid another obscuration caused by slit. Due to the cylindrical lens, the spot size of each subsystem is about 2.92×0.32mm and the F

number is still about 4 in the dispersed direction. The system is composed of three parts, including an F-zoom lens group, an interference group and an imaging lens group. The following table shows the result of optical design.

Table.2 Optical parameters of FDMI subsystem

| Parameter | Value |
|---|---|
| Fixed Delay (OPD) | 1.72mm |
| Wave Band | 5,100~5,500 Å |
| F number of Incident Ray | 4 |
| F number of Emergent Ray | 4 in dispersed direction; >4 in slit direction |
| Clear Aperture | < ϕ 3.5mm ( ϕ 4mm actual lens' size) |
| Object Height | ϕ 0.32mm Multi-mode Fiber |
| Image Size | 2.92×0.32mm |
| Interval of Optical Axis | 4mm |
| BS Size | 12×12×12mm Cubic BS |
| Cylindrical Lens' Size | 6×12mm |

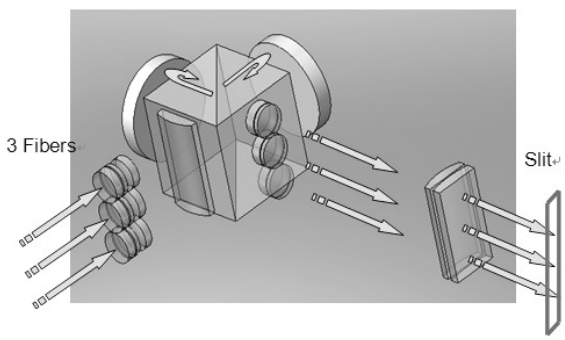


Fig.3 The optical structure of FDMI subsystem

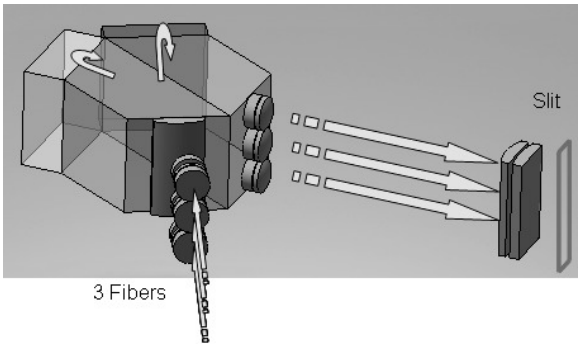


Fig.5 A model of the interferometer group under development

In aspect of optical analysis, it's done through both spherical lens mode and cylindrical lens mode. In the spherical lens mode, the imaging quality was normally analyzed as the following figure (4). In the later mode, the spot size is carefully tested. Especially, we analyzed the lateral color aberration caused by different wavelength, because this size difference may reduce the precision of gathering the fringe's phase from spectrum. In addition, the interference group shown in the above figure (3) is just an experimental one, but an achromatic, high thermostable interference group with both fixed OPD and large viewing field is under the development now, as figure (5). It's a complicated and exciting work that chooses the best pair of glass materials to simultaneously realize the above four features.

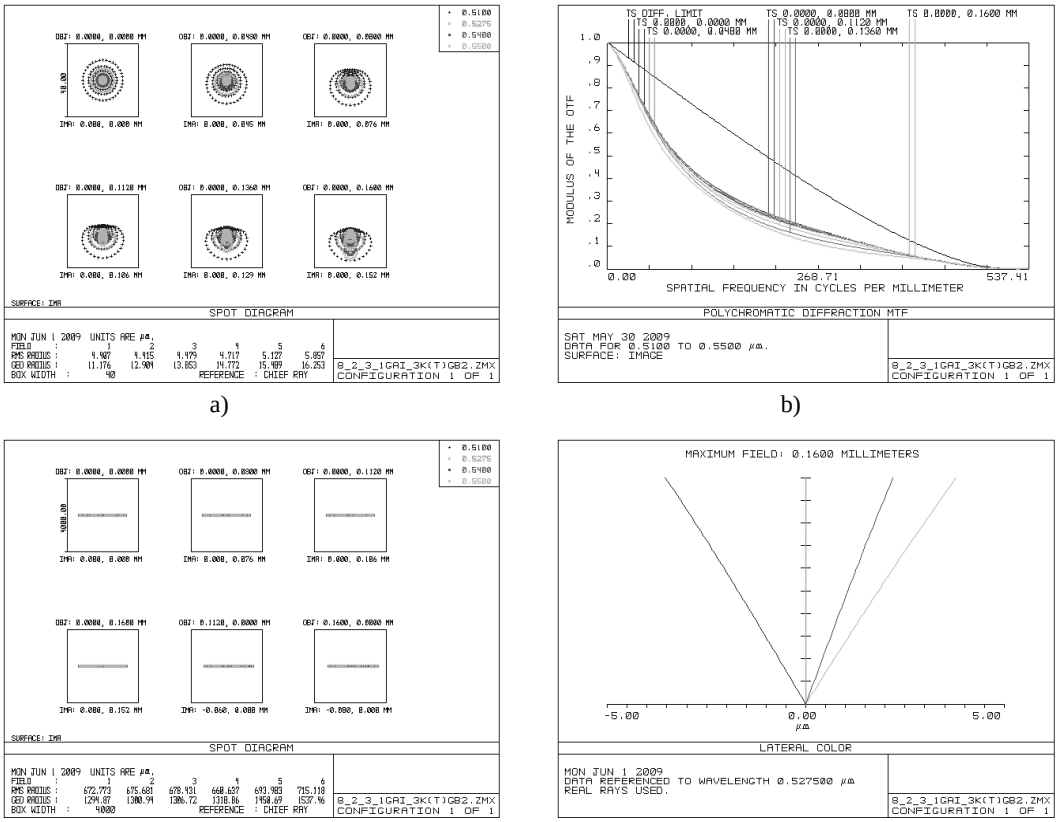


Fig.4 Analysis diagrams of the optical subsystem: a) Spot diagram in spherical mode; b) MTF curve in spherical mode; c) Spot diagram in cylindrical mode; d) lateral color curves in cylindrical mode.

### 2.3 Mechanical Structure

Minimizing the mechanical structure is a direct way for MESS prototype to reduce central obscuration as more as possible. The module scheme is also applied into mechanical design, including inner structure in a module and external structure between the neighboring modules. Here, the inner structure in a module is given in detail. Three mechanical groups are correspondingly designed for optical system, as figure (6) a. Some special schemes are list as follows:

(1) Using a triple-aperture lens cell without stair is useful to keep the interval distance and the clear aperture, as follow shown. And the fabricating error of lens cell is as precise as $\pm 5$um. Since the using of plano-concave and plano-convex lenses, the assemble reference is easily identical with the cell surface. Moreover, the thickness between the neighboring lenses in a subsystem can be directly got without the gasket. The figure (6) shows some pictures of finished elements.

(2) In this triple-object prototype, the adjusting structure is divided into internal and external parts. The adjustment during the lens group is finished by internal part, and then the assembly between interferometer and spectrometer is completed by external part. The external structure, which possesses six-dimension adjustments with high precision, is located at the outside of the collimating beam of spectrometer.

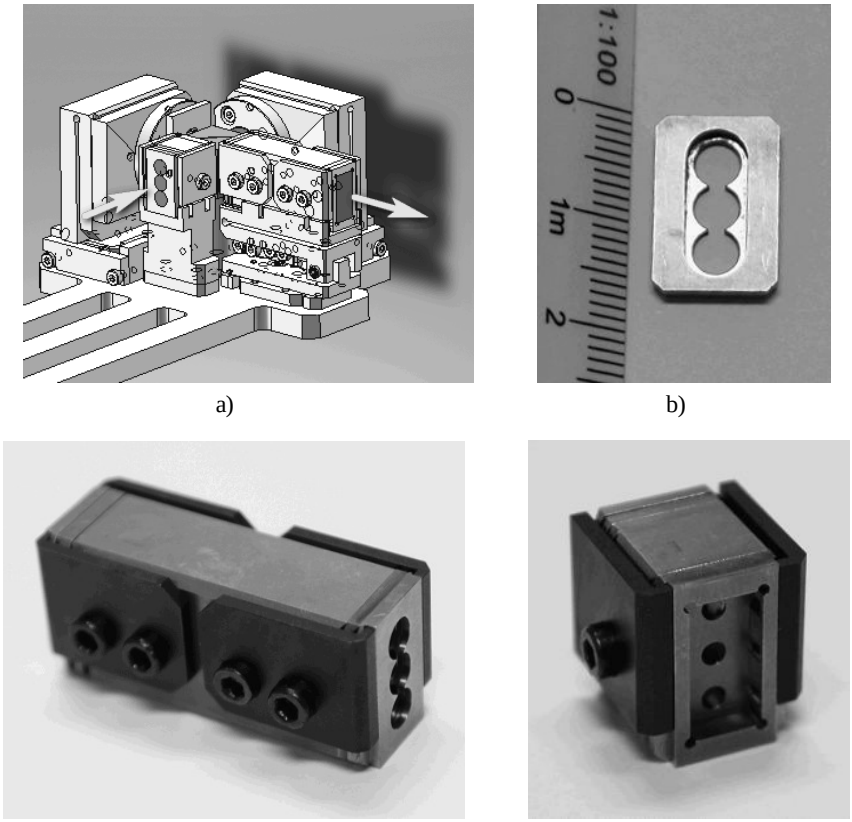


a) b)

c) d)

Fig.6 Mechanical structure of triple-object FDMI prototype (a) and some pictures of mechanical elements: b) Lens cell; c) F-zoom Lens group; d) Imaging lens group.

But for the practical multi-object FDMI, the overall structure must meet the requirement of arc-shaped structure. So we tried a trade-offs that accepts a certain position error in single module but seriously meets the position requirement in the overall structure. It means that the ray axes of three subsystems are relatively parallel in single module, and the axial angle between the neighboring modules is consistent with the required one. A kind of wedge element may be used for keeping the identical axial angle of 1.48° . A model of the overall structure is shown in figure (7), and some related work is processing.

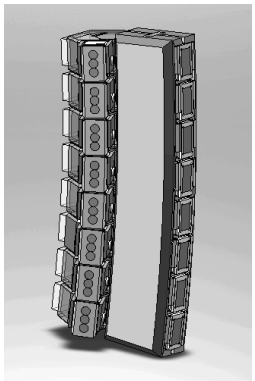

Fig.7 Model of the overall structure

## 3. CONCLUSION

At present, we're at the first stage of the conceptual design phase, which contains the overall integration of optical system, the development of data processing program and the performance test. The optical system and the data processing program will be tested after the coming integration between the triple-object FDMI and LRS. At this stage, our aim is that smoothly obtain an interference spectrum of spectral light and the high-precision fringe phase. In addition, there is much work for making MESS prototype more perfect. Three works have been determined at the next stage.

(1) Add a more reliable interference group with four required features introduced in the section 2.2.

(2) Complete the overall structure of prototype. Though there are only about 30 objects per spectrometer, LAMOST still have powerful observational ability for multi-object observation, which is equivalent to 480 objects in total.

(3) Design a better external adjusting structure and an environmental control system to improve its stability.

## 4. ACKNOWLEDGMENTS

MESS is performed by corporation between NIAOT and NAOC under the fund support of Joint Fund of Astronomy, which is set up by NSFC and CAS (No. 10978004). Thanks to Dr. Zhongwen Hu work at NIAOT, Prof. Lei Chen work at Nanjing University of Science and Technology (NJUST) and Prof. Gang Zhao, Liang Wang work at NAOC for help in the past research.

## REFERENCES

[1] Exoplanet Encyclopedia, "http://exoplanet.eu/catalog.php.", (2010).

[2] James E. Gunn, Walter A. Siegmund, et al. "The 2.5 m Telescope of the SLOAN Digital Sky Survey", ASJ 131, 2332–2359 (2006).

[3] Dingqiang Su, Xiangqun Cui et al. "Large-sky-area multi-object fiber spectroscopic telescope (LAMOST) and its key technology", Proc. SPIE, 3352, 76 (1998).

[4] Yongtian Zhu, Zhongwen Hu, et al. "A multipurpose fiber-fed VPHG spectrograph for LAMOST", Proc. SPIE, 6269, 62690M1- 9(2006).

[5] D. Erskine and J. Ge, "Novel Interferometer Spectrometer for Sensitive Stellar Radial Velocimetry", ASP Conf, 195, 501-507 (2000).

[6] J. van Eyken, J. Ge, et al. "Results from upgrade to the Radial Velocity Instrument ET at the KPNO 2.1m", Proc. SPIE 5492, 445-451 (2004).

[7] J. Ge, J. van Eyken, etc. "The first extrasolar planet discovered with a new generation high throughput Doppler instrument", Astrophysical J. 648, 683-695 (2006).

[8] J. Edelstein, M. W. Muterspaugh, et al. "TEDI: the TripleSpec Exoplanet Discovery Instrument", Proc. SPIE 6693, 33-38 (2007).

[9] J. Ge, J. van Eyken et al. "An All Sky Extra-solar Planet Survey with New Generation multiple Object Doppler Instruments at Sloan Telescope", RevMexAA (Serie de Conferencias) 29, 30-36 (2007).

[10] D. Erskine and J. Edelstein, "High-Resolution Broadband Spectral Interferometry", Proc. SPIE 4854, 1-12 (2002).

[11] D. Erskine, "An Externally Dispersed Interferometer Prototype for Sensitive Radial Velocimetry: Theory and Demonstration on Sunlight", ASP 115, 255-269 (2003).