Control strategies and algorithms for large astronomical optical telescope

Shihai Yang

1. National Astronomical Observatories / Nanjing Institute of Astronomical Optics & Technology, Chinese Academy of Sciences, Nanjing 210042, China;
2. Key Laboratory of Astronomical Optics & Technology, Nanjing Institute of Astronomical Optics & Technology, Chinese Academy of Sciences, Nanjing 210042, China;
3. Graduate University of Chinese Academy of Sciences, Beijing 100049, China

ABSTRACT

This paper gives a summary on control strategies and algorithms for contemporary large astronomical optical telescopes. The study lays emphasis on high precision tracking for large astronomical optical telescopes with large inertia, ultra-low speed and multi-disturbance. The control strategies and algorithms of some telescopes based on direct drive or friction drive are analyzed carefully. Finally, the future development in this field is presented.

Keywords：control strategy, algorithm, telescope, ultra-low speed, high precision, multi-disturbance

1. INTRODUCTION

The role of control system of astronomical optical telescope is to track the star and point to the target accurately. As to large astronomical ground optical telescopes, many disturbances like wind should be correct. At the same time, high tracking and pointing accuracy are needed. Taking LAMOST as an example, the requirement is 0.23"RMS (10 minutes without guiding), 1.20" RMS (1 hour without guiding) and 0.23" RMS (3 hours with guiding).So control system especially control strategy and algorithm should be designed carefully.

The control strategy and algorithm should satisfy the requirements as follows:

·Real-time characteristic

·Reliability

·High pointing and tracking accuracy

·Robustness

Here we discuss telescope main axis control including Azimuth and Altitude. Normally the axis servo can be represented as shown in Fig.1 and Fig.2.

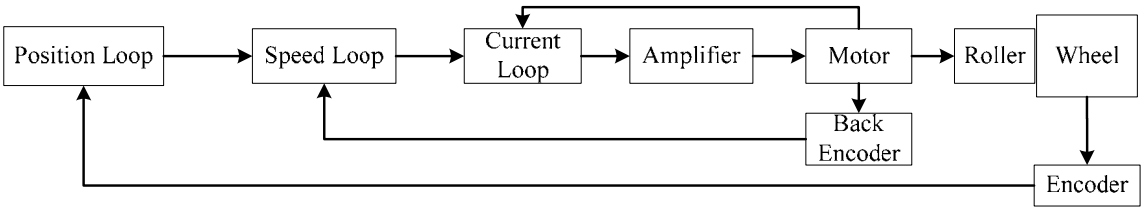

Fig. 1 Block diagram of the controlled plant of friction drive system

* Correspondence: Shihai Yang , Email: shyang@niaot.ac.cn Telephone: +86-25-5482-267; Fax: +86-25-5405562; Nanjing Institute of Astronomical Optics & Technology (NIAOT), Bancang Str. 188 210042 Nanjing P. R. China

Ground-based and Airborne Telescopes III, edited by Larry M. Stepp, Roberto Gilmozzi, Helen J. Hall
Proc. of SPIE Vol. 7733, 77335D · © 2010 SPIE · CCC code: 0277-786X/10/$18 · doi: 10.1117/12.855875

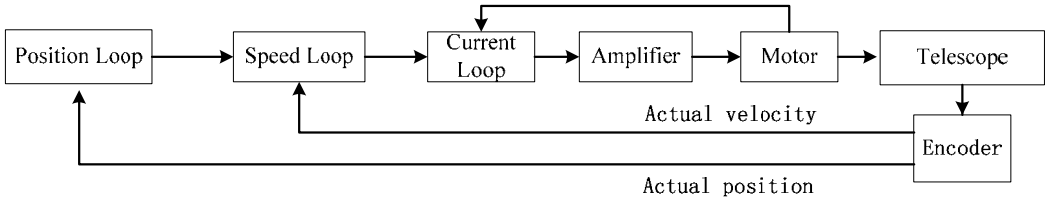

Fig. 2 Block diagram of the controlled plant of direct drive system

2. CONTROL STRATEGIES

Control Strategy here is defined as methods adopted by telescope control system to match with a telescope's tasks.

With the development of computer and electronics technology, the control system of telescope adopts Single chip computer, PLC(Programmable Logic Controllers), Industrial PC(IPC), DSP and motion controller as its central processing unit. They are so fast that many advanced strategies and algorithms are available for use.

Gear drive was used for small, medium and large telescope in the past. Even these days some large telescopes still adopt gear drive such as 2.4m telescope of National Astronomical Observatories/Yunnan Observatory(May,2007). It's difficult to make high-accuracy gear for large telescope. The backlash of gear influences the tracking accuracy. So "multi-motor anti-backlash" drive is adopted to eliminate backlash. Dual-motor anti-backlash drive is popular.

But more and more large astronomical telescopes adopt friction drive or direct drive nowadays. Keck, Gemini and LAMOST use friction drive. With low-cost, high-performance, and without periodical error and backlash, friction drive is promising in the area of ultra-low speed and high accuracy drive. But friction drive has its own deficiencies. Slippage, creepage, fluctuation of friction torque should be overcome.

VLT, Subaru, GTC and 2.5m Russian Telescope adopted direct drive .The 2.5m Russian Telescope is for Kislovodsk solar station and it is under construction in Nanjing Institute of Astronomical Optics & Technology.

A main factor that influences the stability of ultra-low speed of friction/direct drive is imbalanced load torque which is caused by the mass asymmetry of telescope, inconstant friction torque, wind disturbance, torque ripple of motor that is caused by cogging effect.

At the same time, telescope is a large inertia load. When the telescope changes its speed, huge inertia torque will bring impact on the system performance. In order to solve this kind of problem, appropriate control method should be adopted.

For main axis control system of a large telescope, distributed structure is a good solution to meet the high requirement on tracking precision, real time ability, reliability and communication.

"IPC+ Multi-axis Controller +Synchronous Brushless Motor Driver+ Brushless Motor" is a typical control model for large astronomical telescope.

Three control loops are employed in the control system: current loop, velocity loop, position loop. They are cascade. Servo schematic is shown in Fig 1&2. Current loop is closed in the amplifier of motor. The function of current loop is to regular the current of motor and in this way to keep the stability of motor torque. At the same time, current loop should response as quickly as it can to control over-current. These requirements can be met by using a Proportional- Integral (PI) compensator.

The velocity loop controls the dynamics of the telescope and rejects disturbance in order to keep telescope to round smoothly. The position loop aims to reduce the tracking and pointing error.

Normally, motor amplifier closes current loop and motion controller closes position loop. Velocity loop can be closed in either amplifier or motion amplifier. It depends on the real control system. If the telescope is direct drive and UMAC/PMAC is used, velocity loop closure in UMAC/PMAC is suggested.

3. CONTROL ALGORITHM

Control engineers have been trying to find a suitable algorithm for main axis of large astronomical telescope. It is hoped that the algorithm has good control performances like low tracking error, strongly adaptive ability to non-linear disturbances and large inertia load. At the same time, It should be simple in structure, easy to be realized and strong robustness, and easy to understand and tune. The algorithms as below are promising in large telescope control system. They have been designed, or tested for some large astronomical telescopes and achieved good performance. But heretofore, no algorithm is perfect and without any defect.

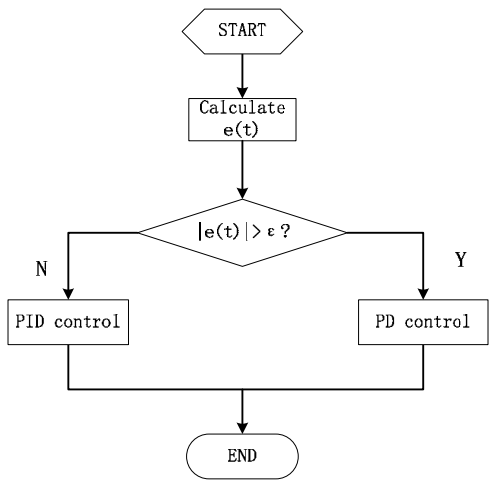

Fig. 3 Integral Separation PID control algorithm

3.1 Classical PID

Traditional PID （proportional–integral–derivative） control is a generic control loop feedback mechanism widely used in industrial control systems.

$$u(t) = K_p e(t) + K_i \int_0^t e(\tau) d\tau + K_d \frac{d}{dt} e(t) \tag{1}$$

Discrete PID controller

$$u(k) = u(k-1) + k_p(e(k) - e(k-1)) + k_i e(k) + k_d(e(k) - 2e(k-1) + e(k-2)) \tag{2}$$

The P determines the reaction to the current error, the I determines the reaction based on the sum of recent errors, and the D determines the reaction based on the rate at which the error has been changing.

PID controller is widely used for many telescopes, due to well-grounded theory, established history, simplicity, and simple setup and maintenance requirements.

PID, PI controllers can be used in current loop, velocity loop and position loop as Fig.1 &2. And PD controller is seldom used individually in servo loop of telescope because the residual steady-state error cannot be eliminated without I.

For servo system of large telescope, classical PID control cannot entirely satisfy the needs of the system because the parameters of classical PID controller are constant. Facing non-linear disturbance such as wind, PID performance is

variable. It seems that the control system of telescope isn't stiff enough.

Although many modern control theories and algorithms have been studied to improve the pointing and tracking performance, a majority of telescopes still use PID or improved PID controllers. The following improved PID algorithms are often be used in telescope servo systems.

3.1.1 Integral Separation PID Algorithm

When a telescope starts to track the target, point to the desired target in the distance or stop immediately, there will be a large following error. As a result, excess overshooting occurs in position servo loop. Disabling the integral function until the error has entered the controllable region is a effective method.

Let ε be setpoint, e (t) be error. When | e (t) |> ε, only use PD control to reduce the overshoot. The system has a faster response. When | e (t) |≤ ε, use PID control to ensure precision and stability.

Integral Separation PID control algorithm is shown in figure 3.

3.1.2 Feedforward PID Algorithm

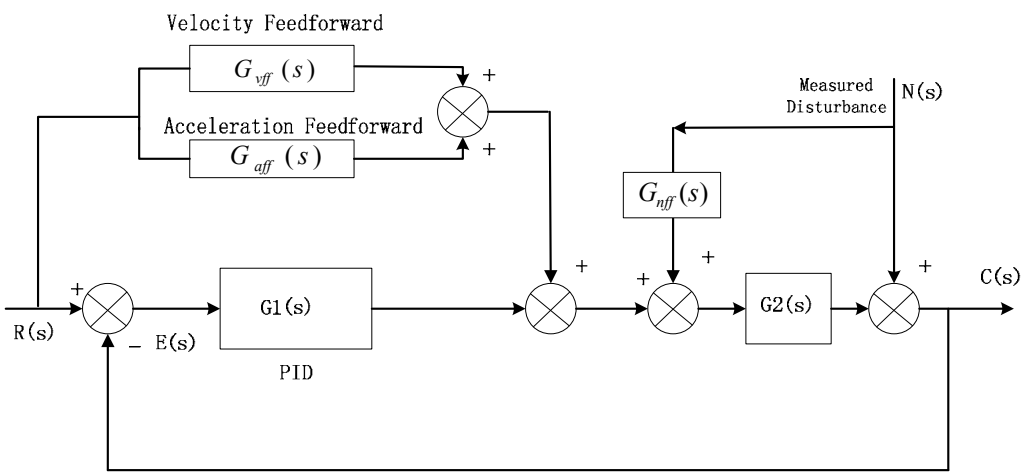

Fig. 4 Feedforward control structure

Feedforward is seldom used alone in telescope servo system. Feedforward control is always used along with feedback control because a feedback control system is required to track setpoint changes and/or to suppress unmeasured disturbances.

The control variable adjustment is not error-based. Instead it is based on mathematical models.

(1) Setpoint compensation control

Velocity feedforward and acceleration feedforward is discussed here.

The velocity feedforward adds an amount to the control effort that is directly proportional to the commanded velocity, to overcome potential position errors that would be proportional to velocity. It will speed the system response comparing to solely relying on position loop. Fig. 4 shows a typical velocity feedforward control structure.

But the shortcoming of velocity feedforward is it induces overshot. Adding acceleration feedforward is a good way to solve the problem.

The acceleration feedforward adds an amount to the control effort that is directly proportional to the commanded

acceleration, to overcome potential position errors that would be proportional to acceleration. Fig. 4 shows a typical acceleration feedforward control structure.

(2) Disturbance compensation control

In ideal situation, feedforward control can entirely eliminate the effect of the measured disturbance on the process output. A mathematical model of the process is usually required for control design. Usually there are modeling errors. But feedforward control can often reduce the effect of the measured disturbance on the output and significantly improve performance over simple feedback control.

To large astronomical telescope, these disturbances come from the mass asymmetry of telescope, inconstant friction torque, wind disturbance, torque ripple of motor that is caused by cogging effect, mechanism motion in the telescope and instruments. These disturbances fall into two categories: linear and nonlinear. Wind is the main disturbance on the axis of altitude and has less influence on azimuth. So a "Wind feedforward loop" is useful to altitude control system. Wind speed can be measured with a fast-response sensor and a correction torque caused by feedforward can counteract wind.

However, linear PID control cannot entirely satisfy the needs of the system because the parameters of classical PID controller are constant.

3.2 H-INFINITY CONTROL

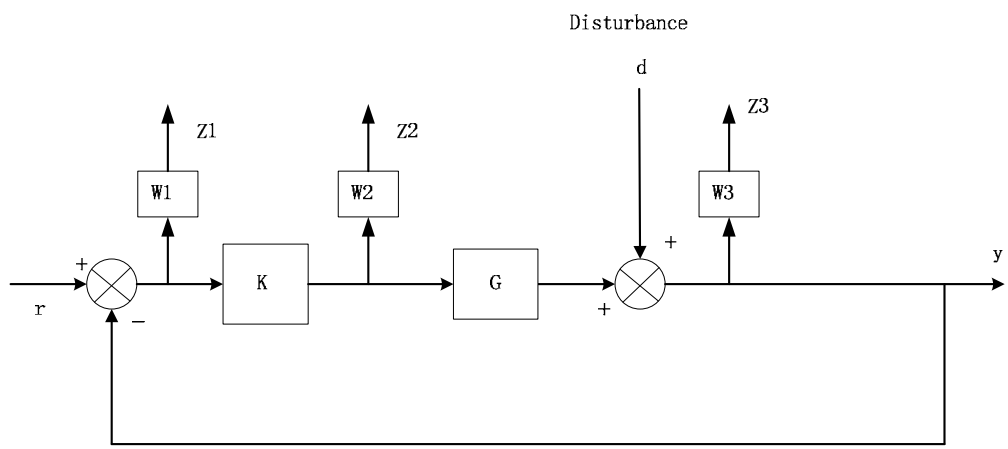

Fig. 5 H∞ control structure

H-infinity control will improve system robustness and the precision of tracking.

H∞ theory has been studied to use in large astronomical telescope. For example, H∞ controllers have been designed and tested in a 2m telescope.[9] And a H∞ design that aims to improve the disturbance rejection of VLT altitude also be discussed in reference [10].

The block diagram in Fig.5 shows a general H-infinity control structure of telescope.

K: H∞ controller , W1~W3:weighting function

S: sensitivity, T: complementary sensitivity

$$S=(I+GK)^{-1}, \quad T=GKS \tag{3}$$

Closed-loop transfer function from r and d to the weighted outputs Z_i :

$$\Phi = \begin{bmatrix} W_1 S & -W_1 S \\ W_2 KS & -W_2 KS \\ W_3 T & W_3 S \end{bmatrix}, \qquad \begin{bmatrix} Z_1 \\ Z_2 \\ Z_3 \end{bmatrix} = \Phi \begin{bmatrix} r \\ d \end{bmatrix} \tag{4}$$

The H_∞ optimal control problem is to find a stabling controller K that minimizes the H∞ norm of Φ, i.e. min$\|\Phi\|_\infty$. There are several ways to come to the H_∞ controller. In practice K can be got by using MATLAB when G and Wi are given.

3.3 NON-LINEAR PID

The control algorithm based on model has a fatal defection. Although many model identification methods are given, it's not easy to get the accurate model of controlled objects.

Non-linear PID control by online regulating PID parameters could realize a better performance than linear PID. Meanwhile, this control method retains the virtues of the linear PID control, such as simple in structure, easy to be realized and strong robustness [11][12].

$$k_p(e(t)) = a_p + b_p(1 - \sec h(c_p e(t))) \tag{5}$$

$$k_d(e(t)) = a_d + \frac{b_d}{1 + c_d \exp(d_d e(t))} \tag{6}$$

$$k_i(e(t)) = a_i \sec h(c_i e(t)) \tag{7}$$

k_p: Proportional gain, k_d: Integral gain, k_i: Derivative gain, e(t): error, a_p, b_p, c_p: Positive constant,

$(k_p)\max|_{e(t)\to\pm\infty} = a_p + b_p$, $(k_p)\min|_{e(t)=0} = a_p$, a_d, b_d, c_d, d_d: Positive constant,

$(k_d)\max|_{e(t)\to-\infty} = a_d + b_d$, $(k_d)\min|_{e(t)\to+\infty} = a_d$, a_i, c_i: Positive constant,

$(k_i)\max|_{e(t)=0} = a_i$, $(k_i)\min|_{e(t)\to\pm\infty} = 0$

The proportional, integral, and derivative terms are summed to calculate the output of the non-linear controller. Defining u(t) as the controller output, the final form of the non-linear PID algorithm is:

$$u(t) = k_p(e(t))e(t) + k_i(e(t))\int_0^t e(t)dt + k_d(e(t))\frac{de(t)}{dt} \tag{8}$$

4. REALIZATION OF CONTROL ALGORITHM IN UMAC/PMAC

Fig. 6 UMAC

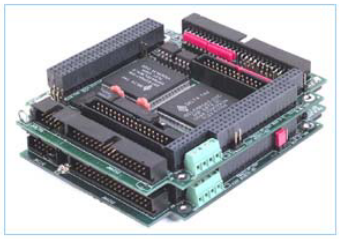

Fig.7 PMAC PC/104

Many telescopes chose Deltatau UMAC or PMAC as controllers. UMAC and PMAC PC/104 are shown in Fig.6 &7. In China, LAMOST and 2.5m Russian Telescope adopted UMAC controllers. PMAC controllers were adopted by the Gemini telescope project to control the elevation and azimuth axes of the twin 8m telescopes. The drive system of Multi-telescope Array (Magdalena Ridge Observatory, New Mexico) is controlled by a Delta Tau UMAC motion controller. The array is planned to comprise up to ten 1.4m diameter telescopes in an equilateral "Y" shape array, operating in the optical and near-infrared, to provide imaging capabilities with sub-milliarcsecond resolution. The first telescope has been constructed and tested in November, 2009. [4]

Hobby-Eberly Telescope（with an effective aperture of 9.2m，located on Mt. Fowlkes at McDonald Observatory in West Texas）uses PMAC to control thirteen motors, seven brakes and limit switches on all axes including each hexapod strut. The HET entered its commissioning phase in 1997, and began science operations in October of 1999.

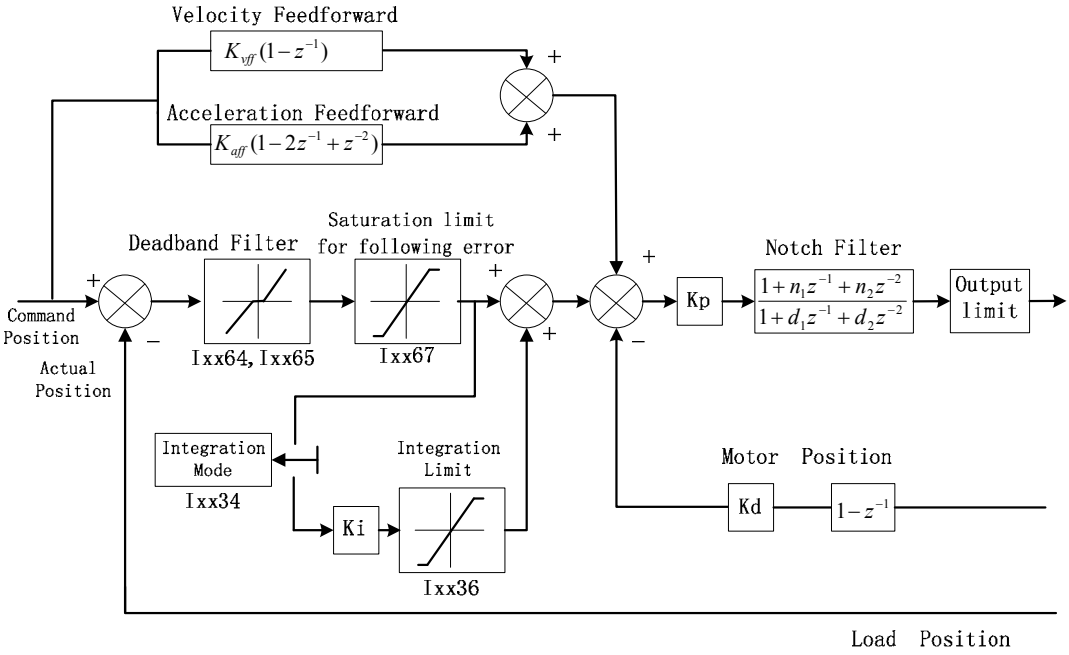

Fig. 8 Servo algorithm of UMAC/PMAC

PID+ Notch Filter +Feedforward

UMAC/PMAC is powerful in servo control. The user can use default mode: "PID+Notch filter+Feedforward".

PID servo loop relies on high gains to achieve good performance. But if the PID gains are too high, the system won't stable. The feedforward works outside the loop and do not cause instability. So feedforward can greatly improve dynamics of a servo system.

Derivative term in the PID controller is highly sensitive to noise, and can cause a process to become unstable if the noise and the derivative gain are sufficiently large. So low-pass filter and notch filter is commonly used to remove higher-frequency noise components.

Notch filter has several possible uses: Anti-resonance ("notch") filter; Low-pass filter; Velocity-loop integrator; Lead-lag filter. One of whose main purposes is to create a "notch" (frequency of low response) in the servo reaction for the purposes of fighting resonance.

Telescope is a large inertia load. When the telescope changes speed, huge inertia torque will bring impact on the system performance. In order to solve this kind of problem, appropriate control method should be adopted. The parameter Ixx35 acceleration feedforward term is an estimate of the inertia of the system, directly providing a force or torque proportional to it and the commanded acceleration. Properly set acceleration feedforward will overcome the following error from large inertia.

Proportional Gain: Ixx30, Derivative Gain: Ixx31, Velocity Feedforward Gain: Ixx32, Integral Gain and Mode: Ixx33, Ixx34, Acceleration Feedforward Gain: Ixx35, Notch Filter Parameters: Ixx36 – Ixx39 I(xx36: n1, Ixx37: n2, Ixx38: d1, Ixx39: d2).[1]

$$G(z) = \frac{1 + n_1 z^{-1} + n_2 z^{-2}}{1 + d_1 z^{-1} + d_2 z^{-2}} \tag{9}$$

If there is no necessary to use Notch Filter for the telescope control system, notch filter parameters Ixx36 to Ixx39 should be set to zero.

Realization of Integral Separation PID Algorithm in UMAC/PMAC

Ixx34 is a single-bit variable that controls the time in which the integral gain term is active. Ixx34 is 1, the integral gain is active only when the commanded velocity is zero (at move end). When Ixx34 is 0, the integral gain term is always active. Usually Ixx34 is set to 0.

But when the telescope starts to move, stops, or change its velocity dramatically, control system can set Ixx34 to 1(or clear Ixx33) in order to disable I gain term. When the position error $|e(t)|$ is less than ε (setpoint that is defined by user), Ixx34 is set to 0 again. The author doesn't suggest keeping Ixx34 to1 when telescope is tracking.

User-Written Servo Algorithm

To the tasks that the algorithms above cannot accomplish, the user can install user-written servo algorithm. There are two methods for creating these user-written servo algorithms. The first is a compiled method called "Open Servo", using Turbo PMAC's high-level language, compiled by the PEWIN32 PRO Executive program. The second is an assembled method using a Motorola cross-assembler for the DSP56300 family [1].

STEP:

(1) To write Open Servo program in any plain-text editor.
(2) To compile the program by the PEWIN32PRO editor's download function.
(3) To set Iyy00/50 (I3300 for Motor 1, I3350 for Motor 2, etc.) to 0, disabling the "Extended Servo Algorithm."

(4) To issue a **SAVE** command to let UMAC/PMAC retain this algorithm.

(5) To set bit 0 of Ixx59 to 1, enabling "user-written" servo algorithm function.

By this way, the users can realize their own algorithms such as H-infinity contro, non-linear PID, sliding mode control, etc. for telescope control system.

5. CONCLUSION AND PROSPECT

This paper concludes some methods and algorithms for large telescope control system, which comes from the author's experience. Reasons for lack of space, something has been omitted. The author hopes it's useful to telescope control engineers.

As to further evolution in this growing fast field, improving disturbance rejection will be more important. The reason is that larger telescopes are more sensitive to all kinds of linear and non-linear disturbance. To find special control methods for special telescopes, to apply modern control algorithms on telescope control in a more simply way, special motion controller, special motors for large telescope will be the focus in this field.

ACKNOWLEDGEMENT

The author would like to thank Mr. Christophe Daugny. The discussion with him in this regard is beneficial and interesting. Many thanks also to Dr. Guomin Wang for his help.

REFERENCES

[1] DELTA TAU Date Systems, Inc., Turbo PMAC User Manual , (2004)

[2] Bai-xuemei, An-zhiyong, Songliang, "Research on the Control Algorithm Based on the PMAC", Control & Automation , Vo1．25， No．13，(2009)

[3] Mao Yao, Baoqi Liang, Mawen Li, Yinyi li, "Driving System Design for 1．2 m Alt-Az Telescope and Synchronized Control for Multi-motor", Astronomical Research &Technology, Vo1．3, No．3, 289-294 (2006)

[4] http://www.observatorysciences.co.uk/downloads/OSLDiscoveryApr10.pdf

[5] P. Schipani, D. Mancini, "VST Telescope Dynamic Analisys And Position Control Algorithms"，Proc. of 8th International Conference on Accelerator & Large Experimental Physics Control Systems, 395-397(2001)

[6] Shihai Yang，Zhenchao Zhang."Servo control system for friction drive with ultra_low speed and high accuracy", Proc. of SPIE Vol.7019, 70192B-1－8 (2008)

[7] Xinqi Xu, Shihai Yang, "Motion control for LAMOST focal plane", Proc. of SPIE Vol. 6052, 60520N-1 -8 (2005)

[8] Xu Xinqi， Xu Lingzhe， Luo Qiufeng，"Novel Control Technologies for Optical Astronomical Telescopes of Contemporary Era"， Progress in Astronomy，Vo1．21， No．3, 195－205(2003)

[9] Gustavo A. Medrano-Cerda, Robert D. Lett, and Paul Rees,"H-Infinity motion control system for a 2 m telescope", Proc. SPIE, Vol. 4836, 88-97(2002)

[10] Toomas Erm，Zdenk Hunk，Bertrand Bauvir, "Time to go H∞?", Proc. of SPIE, 5496, 68-78(2004)

[11] Xiao Yongli, Zhang Sheng, "Design of a class of Non-linear PID Regulator in Position Servo System", Electrical Automation, 20-22(2000)

[12] Shihai Yang, "Study of control method for large telescope with friction drive", Proc. of CiSE, (2009)