The Study on Servo-Control System in the Large Aperture Telescope

Wei Hu[1,2], Zhenchao Zhang[1], Daxing Wang[1]

1.National Astronomical Observatories/Nanjing Institute of Astronomical Optics & Technology, Chinese Academy of Sciences, Nanjing 210042(E-mail: whu@niaot.ac.cn)

2.Graduate School of the Chinese Academy of Sciences, Beijing 100049

Abstract

Large astronomical telescope or extremely enormous astronomical telescope servo tracking technique will be one of crucial technology that must be solved in researching and manufacturing. To control technique feature of large astronomical telescope or extremely enormous astronomical telescope, this paper design a sort of large astronomical telescope servo tracking control system. This system composes a principal and subordinate distributed control system, host computer sends steering instruction and receive slave computer functional mode, slave computer accomplish control algorithm and execute real-time control. Large astronomical telescope servo control use direct drive machine, and adopt DSP technology to complete direct torque control algorithm, Such design can not only increase control system performance, but also greatly reduced volume and costs of control system, which has a significant occurrence. The system design scheme can be proved reasonably by calculating and simulating. This system can be applied to large astronomical telescope.

Keywords: Large Aperture Telescope, Digital Signal Processor (DSP) Module, Direct Torque Control(DTC), Permanent Magnet Synchronous Machine(PMSM), Intelligent Power Modules (IPM)

1. INTRODUCTION

Human need continuously to plumb the universe, while astronomic development also requires more and more large astronomical telescope. Large astronomical telescope or extremely enormous astronomical telescope servo tracking technique will be one of crucial technology must be solved in researching and manufacturing.

To control technique feature of large astronomical telescope or extremely enormous astronomical telescope, we regard the whole electromechanical structure as a motion control system and the motor is an inalienable part of the structure. We can process optimization design for magnetic circuit, circuit and mechanical structure. In addition we can use computer control technology directly to change tracking electromechanical structure mode of astronomical telescope as a single Arc Movement mode. Thus we can attain simplifying telescope structure and increasing telescope accuracy.

This paper design a sort of large astronomical telescope servo tracking control system, this system composes a principal and subordinate distributed control system, host computer sends steering instruction and receive slave computer functional mode, slave computer accomplish control algorithm and execute real-time control. Large astronomical telescope servo control use direct drive machine, and adopt DSP technology to complete execute direct torque control algorithm. Such design cannot only increase control system performance but also greatly reduce volume and costs of control system. Which has a significant occurrence. The system design scheme can be proved reasonably by calculating

Advanced Software and Control for Astronomy II, edited by Alan Bridger, Nicole M. Radziwill
Proc. of SPIE Vol. 7019, 701925, (2008) · 0277-786X/08/$18 · doi: 10.1117/12.786757

and simulating. It can be applied to large astronomical telescope.

2. Model of PMSM

Large astronomical telescope driving motor is alternating current Permanent Magnet Synchronous Machine(PMSM). In order to design and research and manufacture high performance direct torque control(DTC) system of large astronomical telescope PMSM DTC, we must study static and dynamic characteristic.

This paper research multivariable model of PMSM, in ideal it can get equivalent physical model of PMSM in Fig.1: stator three-phase winding axes A, B and C is fixed in space. It regards A axes as reference coordinate axes, rotor winding axes a, b, c rotate to follow with rotor, θ_r is electrical angle between rotor flux linkage and stator A-phase winding axes[1].

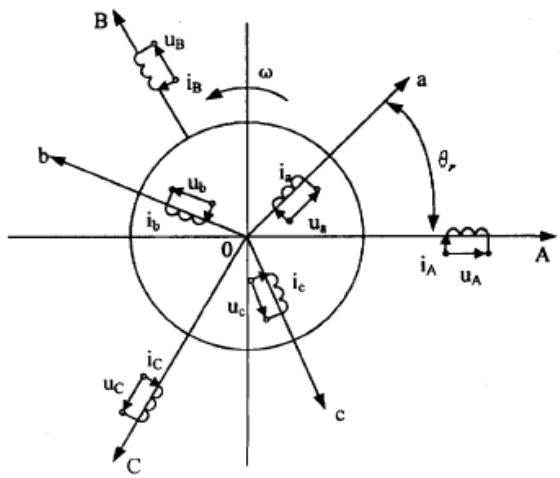

Fig.1 Physical model for PMSM

During transient state running of PMSM, in stator three-phase stationary reference frame A, B, C, neglecting stator winding resistance, define stator current space vector:

$$i_s = \sqrt{\frac{2}{3}}(i_A + \alpha i_B + \alpha^2 i_C^2) \tag{1}$$

Where $\alpha = e^{i120^\circ}$.

We selected fundamental wave section of exciting field which is generated rotor permanent magnet, then stator voltage vector equation of ABC shafting is followed:

$$u_s = R_s i_s + \frac{d}{dt}(L_s i_s) + \frac{d}{dt}(\psi_f e^{j\theta_r}) \tag{2}$$

Where u_s is stator voltage space vector, R_s is stator phase resistance, L_s is equivalent synchronous inductance, respectively.

For the PMSM of large astronomical telescope, air gap is not well-distributed, so synchronous inductance L_s is

not constant in equation (2). for convenience, we use synchronous rotation axes dq shafting to analyze mathematical model of PMSM. And permanent-magnet fundamental wave exciting field axes(that is pole axes) is regarded d axes(direct), following rotor rotation orientation, which is 90° electrical degree in front d axes, it is defined q axes(quadrate), dq axes rotate with rotor by electrical degree ω_r, its space coordinate was confirmed by electrical degree between d -axes and A-axes, so figure 1 can be further showed fig.2[1,2].

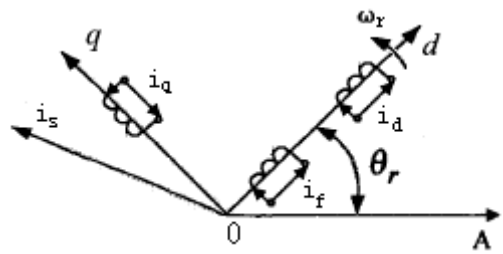

Fig.2 dq rotating coordinates of PMSM

Assuming $L_d = L_q = L_s$,in dq synchronous rotation reference frame, PMSM voltage equations are followed[3]:

$$\begin{bmatrix} u_d \\ u_q \end{bmatrix} = \begin{bmatrix} R_s + pL_s & -L_s \cdot \omega_r \\ L_s \cdot \omega_r & R_s + pL_s \end{bmatrix} \begin{bmatrix} i_d \\ i_q \end{bmatrix} + \begin{bmatrix} 0 \\ \omega_r \psi_f \end{bmatrix} \tag{3}$$

stator flux equations are presentation as:

$$\begin{bmatrix} \psi_d \\ \psi_q \end{bmatrix} = \begin{bmatrix} L_s & 0 \\ 0 & L_s \end{bmatrix} \begin{bmatrix} i_d \\ i_q \end{bmatrix} + \begin{bmatrix} \psi_f \\ 0 \end{bmatrix} \tag{4}$$

electromagnetic torques can be expressed as follow:

$$T_e = \frac{3}{2} P(\psi_d i_q - \psi_q i_d) = \frac{3}{2} P[\psi_r i_q + (L_d - L_q) i_d i_q] \tag{5}$$

Since ultra-low speed characteristic of PMSM was studied in this paper, round flux was adopted, and square of stator flux amplitude is written as:

$$\psi^2 = \frac{1}{2}(\psi_d^2 + \psi_q^2) \tag{6}$$

Where

ψ_d , ψ_q : The d - and q -axes stator flux linkages;

u_d , u_q : stator voltage on d - and q -axes;

i_d , i_q : stator current on d - and q -axes;

L_d , L_q : stator inductance on d - and q -axes;

p : differential operator;

L_s , R_s : machine stator winding inductance, resistance, respectively;

ψ_f : coupling flux linkages of rotor magnetic steel in stator;

ω_r : rotor angular velocity;

P : motor pole number.

3. Servo system direct torque control

Fig.3 is block diagram of PMSM DTC of large astronomical telescope. Its principle of is: by detecting 3-phase current of inverter output and direct current side voltage of inverter, it can be calculated machine electromagnetic torque and stator flux in rest frame. Signal produced by photoelectric encoder are send to position processor singlechip in Fig.3, then singlechip translate this two signal into position signal, speed signal and inverting signal (this paper only consider speed control), speed regulator definite torque measured value according torque specified value and actual speed, furthermore compare specified value with feedback torque, then it can be get torque control signal after proportional-integral (PI) controller. in a similar way, it can be obtained flux control signal, flux, torque control signal, and other stator flux present position signal, through voltage switch vector table, determine appropriate switch state, inverter is controlled to drive alternate PMSM[2,3,5].

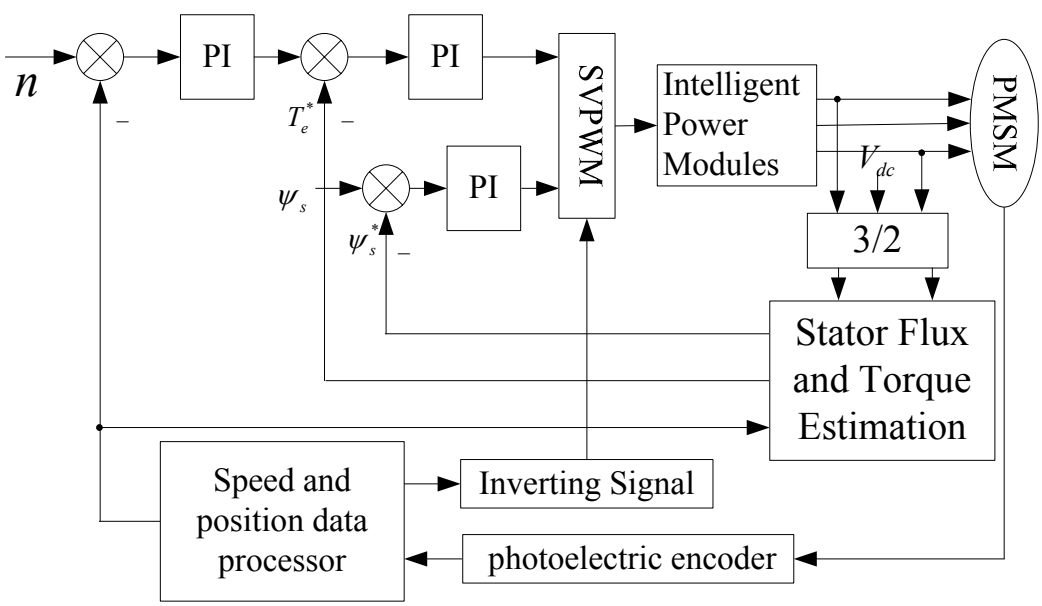

Fig.3 Fundamental block diagram for PMSM DTC

4. Complete scheme design of large astronomical telescope servo control system

Fig.4 is total scheme design structural diagram of large astronomical telescope servo control system.

This system is consisted of upper and lower computers. Upper computer is connected to lower computer through serial communication. Host computer provides various kinds of motor control. At the same time, display machine operational parameter which received from slave computer. Slave computer include DSP module, executing machine, signal collecting and comparing element, position data processor singlechip. Telescope executing machine is direct drive motor, TMS320F2812 is undertook core control task. Speed adjuster, current regulator, direct torque control involved coordinate conversion, mathematical manipulation, fault information judgement and sum, and select of control mode are achieved by TMS320F2812 software[2,3,4].

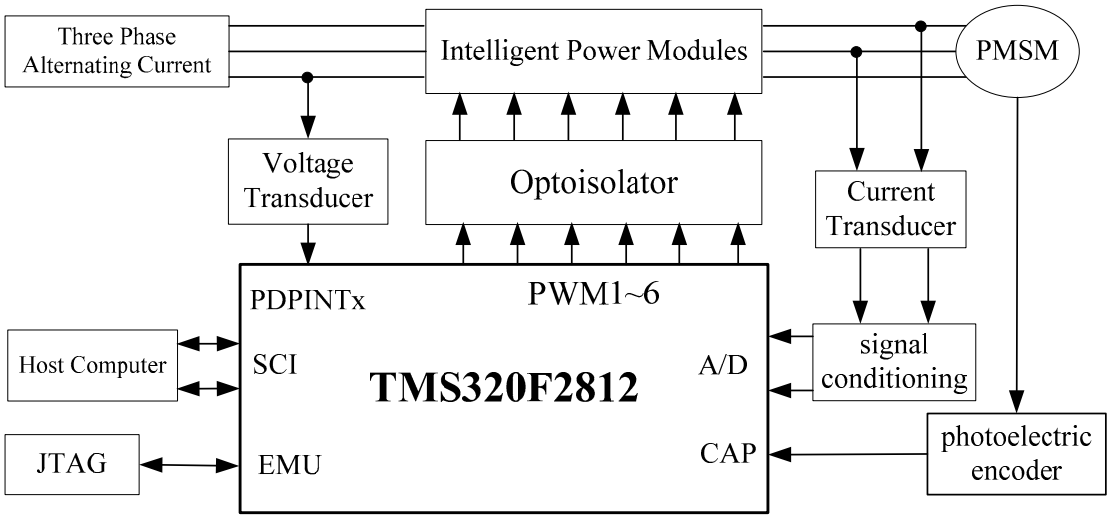

Fig.4 servo control system hardware structural diagram of large astronomical telescope

This system have designed much monitoring and protect circuit to monitor and defend alternate current, voltage of direct current element, and state of inverter bridge lateral.

5. DTC system simulation of PMSM

In order to check control effect of the forenamed scheme, this paper has preceded simulink research. In MATLAB environment, under aforementioned PMSM DTC principle, utilizing SIMULINK instrument, construct DTC and DTC simulink, which is, based vector subsection method. This mode was divided into two large part, that is motor mode and control system, according to modularizing modeling ideal, control system was again divided into various function independent submodule, it include switch table, inverter mode, coordinate transformation, flux observer, position estimation, choose sector module, flux feedback and torque observer. According to fig.3, we build system simulation model, this paper is only list several mode for lack of space.

5.1 flux observer mode[6,7]

Fig.5 and fig.6 were simulation of stator flux observer through equations (4) and (6).

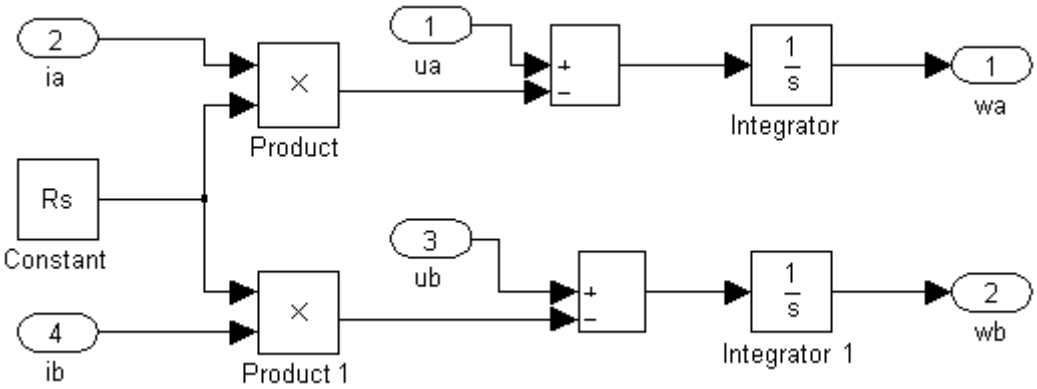

Fig.5 flux observer module

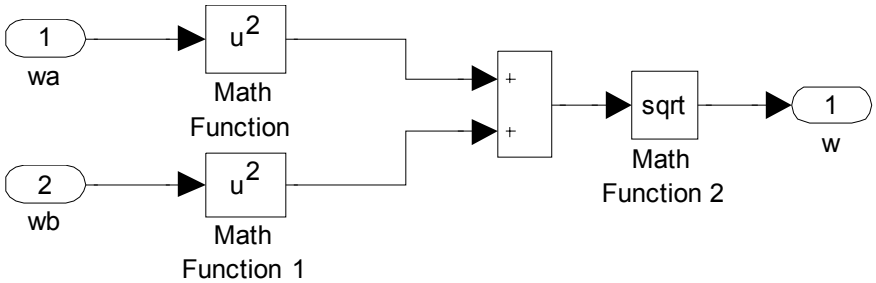

Fig.6 stator flux amplitude observer module

5.2 torque observer module

Fig.7 was simulation of torque observer through equations (5) .

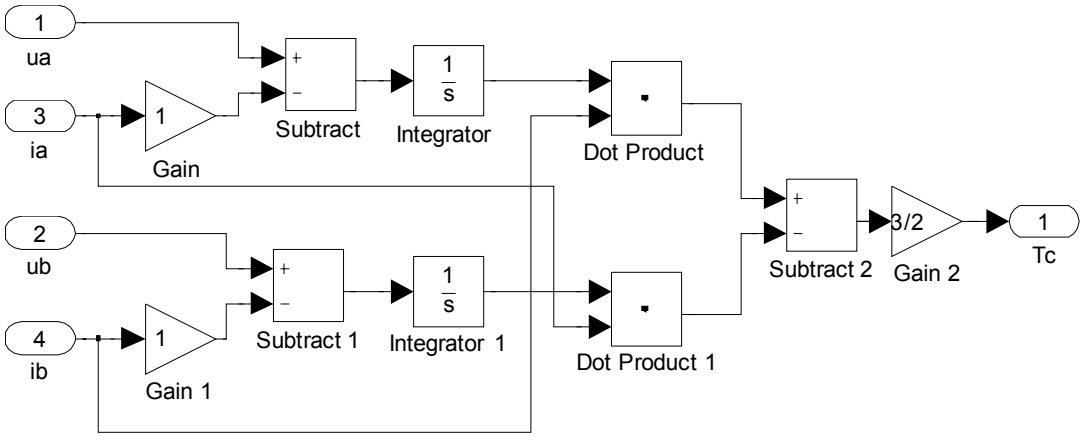

Fig.7 torque observer module

5.3 3/2 transformation module

Coordinate transformation, which was required by direct torque, was followed as fig.8.

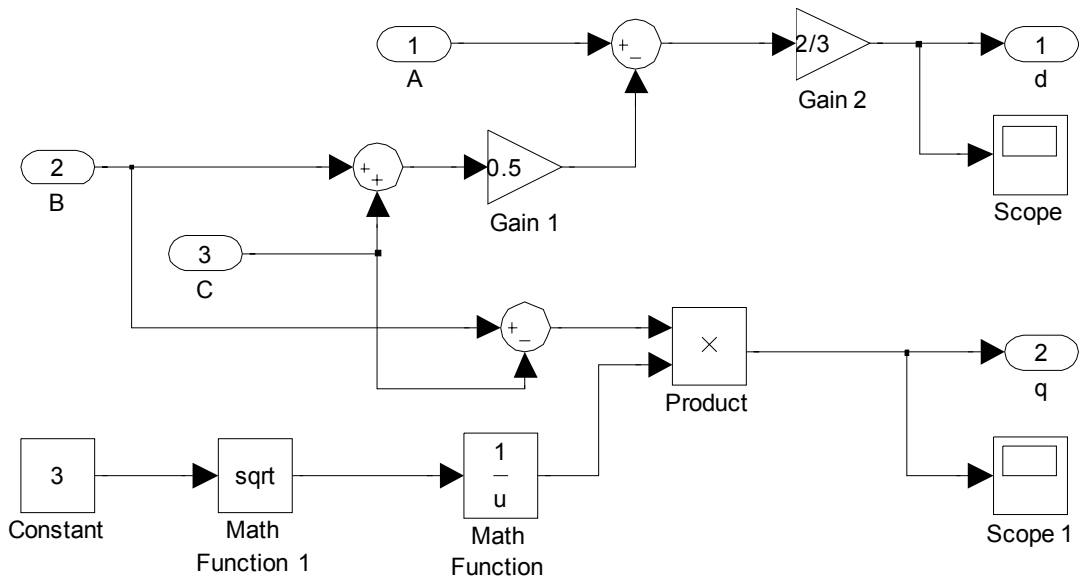

Fig.8 3/2 transformation module

Stator three-phase of PMSM was connected by Y form. Machine parameter was saw table 1. system simulink result was followed as form fig.9 to fig.11. fig.9 was given stator flux waveform of PMSM DTC, fig.10 three-phase voltage waveform, fig.11 DTC waveform, respectively.

Table 1 PMSM DTC parameter

model number	PMSM	Stator winding connection	Y
rated current	10A	rated voltage	380V
Rated power	2kW	rated speed(max)	10°/s
moment of inertia	15000N·m	Number of poles	6
Direct axis inductance	11.75mH	Quadrature axis inductance	25.70mH

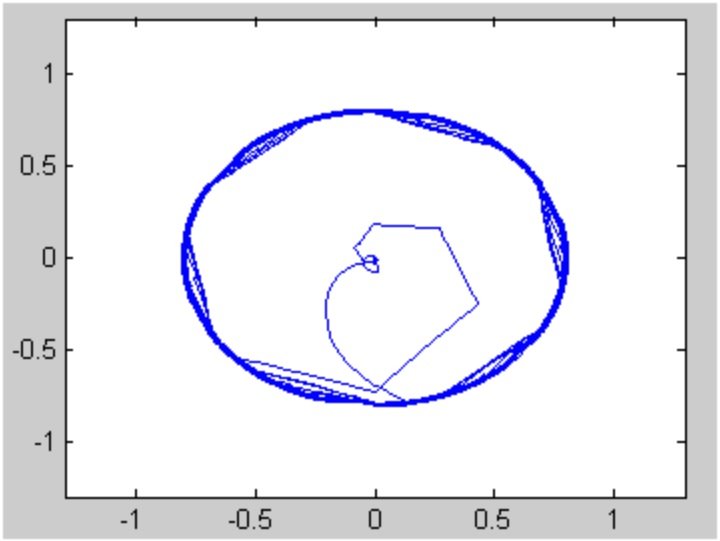

Fig.9 Flux linkage curve for the DTC of PMSM

Form fig.9, it can see, in the stator flux, flux ripple was limited between 0.791 and 0.805 through part enlarge curve. From fig.10 it can be saw that system current waveform was smooth sine wave.

From torque response curve in fig.9, it can be noted that torque ripple also was much little, and torque ripple was limited under 4 percentage.

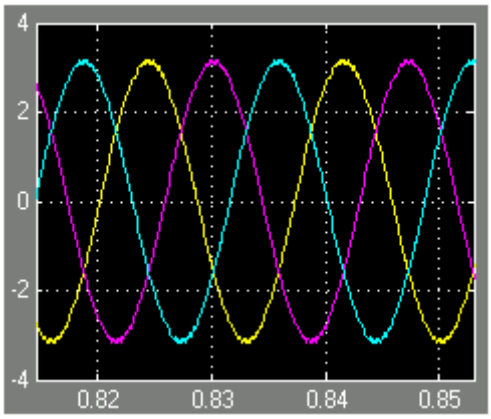

Fig.10 three current waveform for the DTC of PMSM

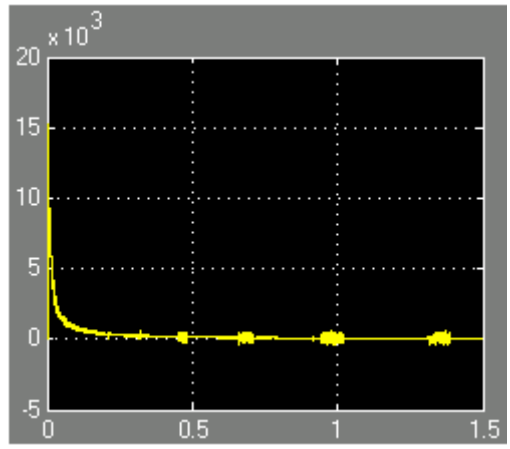

Fig.11 torque curve for the DTC of PMSM

6. Conclusion

From above-mentioned simulink, we can obtain following conclusion:

(1) this paper design DTC system for tracking control of large astronomical telescope, flux orbit was round, it was illustrated that direct and quadrate sine standard of stator flux was fine, and stator flux amplitude was well controlled within given error, torque steady state error also was contained within specified difference range. It was proved that this system was well tracking property and dynamic response characteristic.

(2) In the closed-loop control, it used PI controller. PI parameter may greatly influence system dynamic and static state performance. It is important process to adjust PI parameter, and workload was also comparatively large. In simulink, it was summarized that control system regular was influenced through PI parameter.

(3)Through calculation and simulink, it was indicated that system design proposal was reasonable, and it was applied into large astronomical telescope.

7. Acknowledgement

This work is partially supported by National Natural Science Foundation of China (10778629). I would like to thank to My tutor, Professors Zhenchao Zhang and Professors Daxing Wang, who signed the purchase order to by order to buy the Intelligent Power Modules (IPM), Current and Voltage Transducers, etc., for my experiments. Especially, they always shares basic concepts to move towards standard system and provided much support during my design period, and teach how to design drive control system and their protection. And thanks all cooperation during my design.

8. Reference

[1]Parasiliti, F.; Petrella, R.; Tursini, M.;, "Sensorless Speed Control of a PM Synchronous Motor based on

Sliding Mode Observer and Extended Kalman Filter", Industry Applications Conference, 2001. Thirty-Sixth IAS Annual Meeting. Conference Record of the 2001 IEEE, Volume 1, 30 Sept.-4 Oct. 2001 Page(s):533-540 vol.1

[2]Haque, M.E.; Zhong, L.; Rahman, M.F.,"A sensorless speed estimator for application in a direct torque controller of an interior permanent magnet synchronous motor drive, incorporating compensation of offset error",PESC Record-IEEE Annual Power Electronics Specialists Conference, v1,2002, p276-281

[3]Fang, C.-H.; Huang, C.-M.; Lin, S.-K.,"Adaptive sliding-mode torque control of a PM synchronous motor",IEE Proceedings: Electric Power Applications,v149,n3,May,2002, p228-236

[4]Lee, Byeong-Seok; Krishnan, R.,"Adaptive stator resistance compensator for high performance direct torque controlled induction motor drives",Conference Record-IAS Annual Meeting (IEEE Industry Applications Society),v1,1998, p423-430

[5]Li Su.Induction motor direct torque control[M].Beijing: China Machine Press,1994.(in Chinese)

[6]Iyer, N.P.R.; Jianguo Zhu;"Modeling and Simulation of A Six Step Discontinuous Current Mode Inverter Fed Permanent Magnet Synchronous Motor Drive Using SIMULINK",Power Electronics and Drives Systems, 2005. PEDS 2005. International Conference on,Volume 2,28-01 Nov.2005 Page(s):1056-1061

[7]Singh, B.; Singh, B.P.; Dwivedi, S.;"DSP Based Implementation of Hybrid Speed Controller for Vector Controlled Permanent Magnet Synchronous Motor Drive",Industrial Electronics, 2006 IEEE International Symposium on,Volume 3,July 2006 Page(s):2235-2241