Application of steel balls to lens calibration in space solar telescope

ZHANG Haiying, NI Houkun
National Astronomical Observatories/Nanjing Institute of Astronomical Optics & Technology,
Chinese Academy of Sciences

ABSTRACT

In Space Solar Telescope, the decentering errors and air spaces between five components of collimating lenses are so small that subcell assembly method has to be adopted. This paper introduces a new method that can easily center lens with three small steel balls and some normal devices. The thought comes from traditional edging technology of lenses. When calibrating a lens, three precise steel balls will give the basis of positioning, After the optical axis of the lens is consistent with inner axis of subcell, the lens and the subcell are bonded together with some RTV adhesive. With all five subcells bonded with those corresponding lenses, they are assembled together again based on the outer reference surfaces that have been machined before. The precision of this method depends on the quality of steel balls and the parallelism of subcells. With the help of ZEMAX calculation, a collimating telescope is used to test the calibration error of the lenses. And steel balls are also introduced to quickly measure parallelism of subcells, and one interference graph of testing results is also presented.

Keywords: decentering error, subcell, steel ball

1. INTRODUCTION

In Space Solar Telescope, the decentering error (Table 1) and air spaces between five components of collimating lenses (Figure 1) are so small that those traditional methods, such as “drop in” and “hard mount”, cannot meet the needs of the calibration error, so subcell assembly method has to be adopted. Normally, the subcell will be precisely machined with the lens bonded together to make the mechanical axis of subcell consistent with the optical axis of lens. But this method needs a precise lathe equipped with optical testing device, so it is very expensive and also hazardous. This paper introduces a new method of subcell assembly that can easily center lens with three small steel balls and some normal devices.

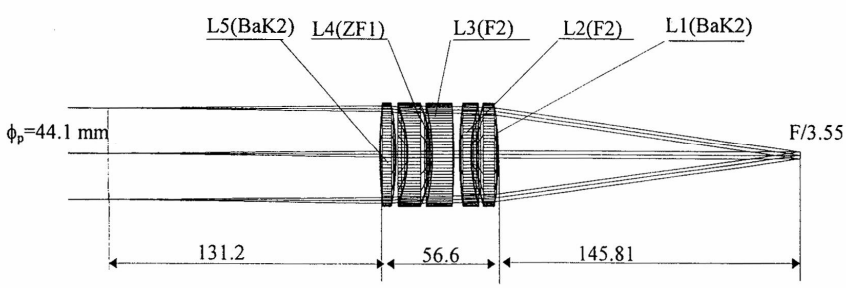

Figure 1: The collimating lenses of SST

Table 1: The calibrating error of components

Component	L1	L2	L3	L4	L5
Decentering error	2μm	3μm	1μm	4μm	3μm
Tilting error	10″	10″	4″	15″	5″

2. CENTERING PRINCIPAL

It is well known that the two sphere center points of surfaces uniquely define the optical axis of one lens. When edging a lens, one sphere surface of the lens is bonded on the rotating head of the lathe. If the shape and position error of the head

2nd Intl. Symp. on Advanced Optical Manufacturing and Testing Technologies: Large Mirrors and Telescopes, edited by Yudong Zhang, Wenhan Jiang, Myung K. Cho, Proc. of SPIE Vol. 6148, 61480A, (2006) · 0277-786X/06/$15 · doi: 10.1117/12.674049

is small enough, the center of this sphere surface will be stable on the rotating axis, and the lens calibration is to adjusting another sphere center to the rotating axis. That means if one sphere surface of the lens is positioned perfectly, the lens calibration procedure becomes to adjusting another sphere center, which simplifies the calibration and testing procedures. But if a subcell is designed like that (Figure 2 left), the shoulder will be very difficult to manufacture because of low positioning error with surface A or B. If three precision steel balls replace the shoulder, the positioning error will be easily controlled by the diameter deviation between steel balls (Figure 2 right).

When calibrating the lenses in Space Solar Telescope, three precise steel balls will give the basis of positioning. First, all five subcells are polished parallel respectively, and then they are assembled together to machine the inner and outer surfaces as the reference surfaces of assembly. Secondly, one subcell is placed on a standard mirror and three precise steel balls are equally positioned in it. When put a lens in the subcell, the inner reference, standard mirror and three precise steel balls form the positioning reference, and one of sphere center of the lens will be stable on the inner axis of subcell while adjusting another sphere center to it. After the optical axis of the lens is consistent with the inner axis of the subcell, the lens and the subcell are bonded together with some RTV adhesive. With all five subcells bonded with those corresponding lenses, they are assembled together again based on the outer reference surfaces that have been machined before.

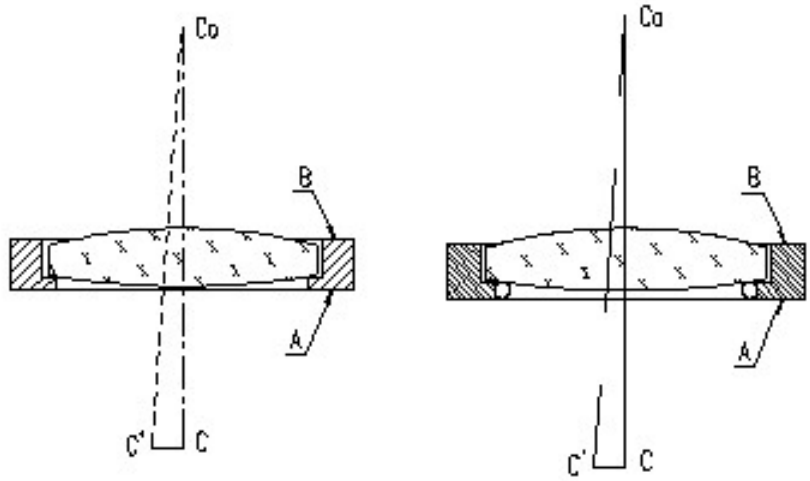

Figure 2: Two centering method of lens

3. ERROR ANALYSES

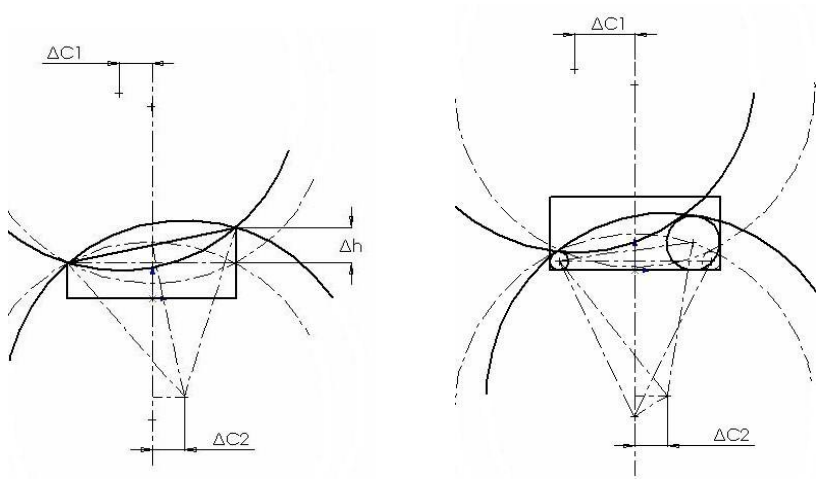

Figure 3: Schematic drawing of decentering error

Figure 3 left shows decentering error of shoulder positioning method, and concave or convex surface will give the same results (ΔC1=ΔC2). For steel ball positioning method (Figure 3 right), concave and convex surface get different results. When set sphere radius R=65mm and steel ball diameter Φ=2mm, the relationship between diameter deviation and decentering error can be demonstrated as Figure 4, which shows different error between concave and convex surfaces (ΔC1>ΔC2). And decentering error is nearly proportional to the diameter deviation of steel balls, which means smaller diameter deviation can get smaller decentering error.

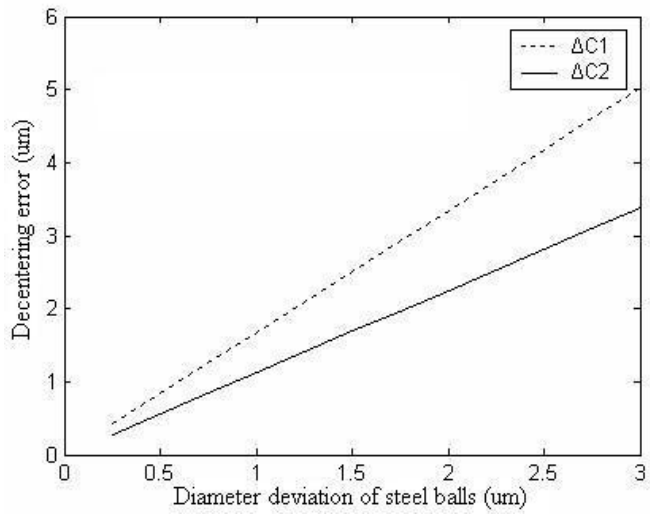

Figure 4: Decentering error of concave and convex surface

As for the lenses in Space Solar Telescope, when set steel ball diameter to 2mm, maximum deviation to 0.5μm and shoulder error to 0.5μm, the decentering errors of five components can be calculated (Table 2). Compare with Table 1 above, we can found that all decentering errors of steel ball positioning method are smaller than those of calibration errors demanded.

Table 2: Decentering error of five components

	Radius (mm)	Error type	Steel ball (μm)	Shoulder (μm)
L1	-173.62	ΔC1	2.06	1.83
L2	80.35	ΔC2	0.74	0.82
L3	95.49	ΔC2	0.91	0.98
L4	64.38	ΔC2	0.56	0.64
L5	-272.95	ΔC1	3.16	2.89

4. LENS CALIBRATION METHOD

A testing system (Figure 6) is established to calibrate optical axis of lens collinear with the mechanical axis of subcell. Laser source point is placed at the view center of collimating telescope. According to the centering method mentioned above, lower sphere center of the lens will be stable on the inner axis of subcell while move the upper sphere center, but the imaging points reflected from lower sphere and standard surfaces will slightly move due to lens thickness. Through collimating telescope, we can see three imaging points reflected from upper surface, second surface and standard surface respectively (Figure 7, Figure 8). When translate the subcell and move the lens above steel balls repeatedly, those three imaging points will be eventually coincidence in the view, that means optical axis of lens is collinear with the mechanical axis of subcell.

There are several other methods of lens calibration, such as Newton ring and rotating method. Due to contrast and over dense ring, the Newton ring can hardly been seen, so this method is difficult to realize. Testing lens on the rotating table is necessary when high precision is demanded, because rotating can double the testing precision of sphere center.

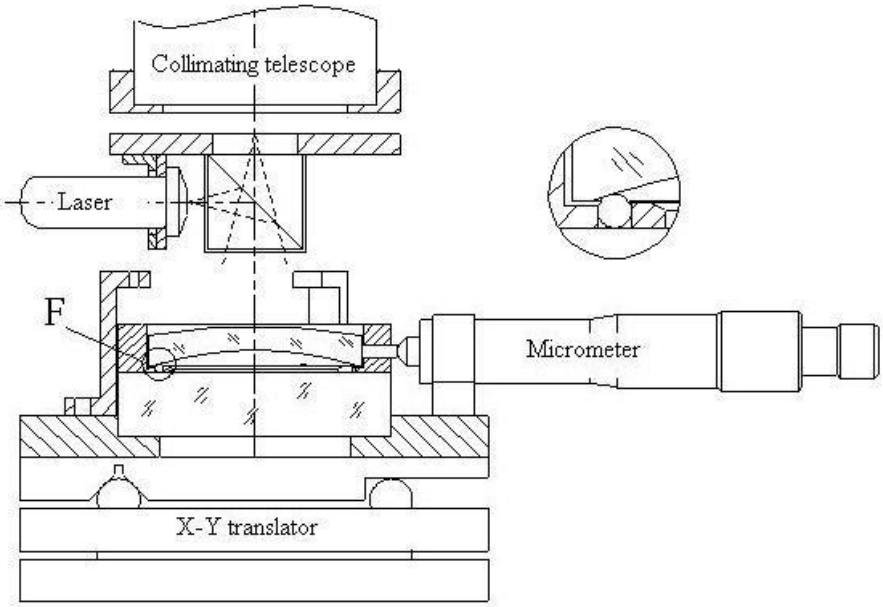

Figure 6: Lens calibration system

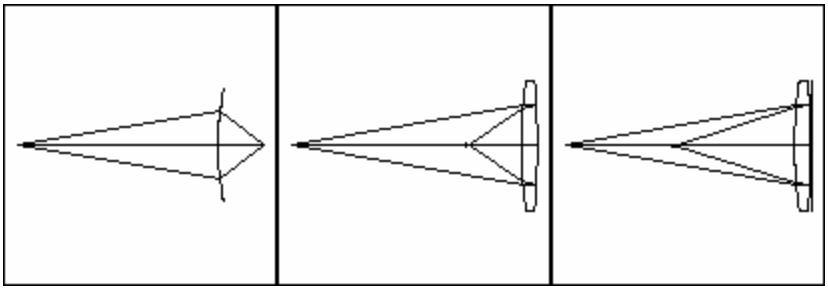

Figure 7: Imaging points from convex lens

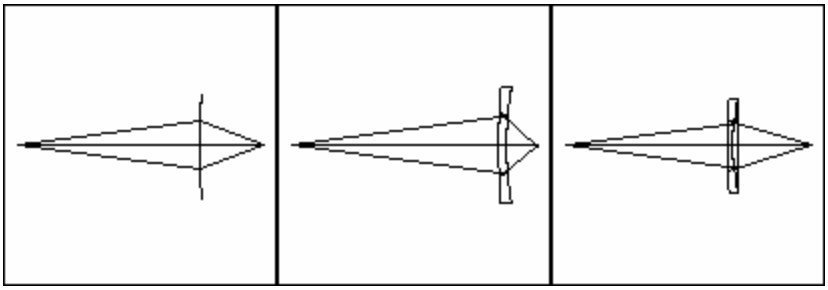

Figure 8: Imaging points from concave lens

5. SUBCELL TESTING SYSTEM

When assemble five subcells together on rotating table or on V-shape chamfer, parallelism of each subcell will influence the quality of co-axis. Table 1 shows that some tilt errors of lens component are very stringent, so the parallelism of each subcell is very important. Then steel balls are also introduced to quickly measure the parallelism of subcells (Figure 9), and one interference graph of testing results is also presented. Calculated from the fringe, the parallelism of subcell can be better than $\theta=2.78''$.

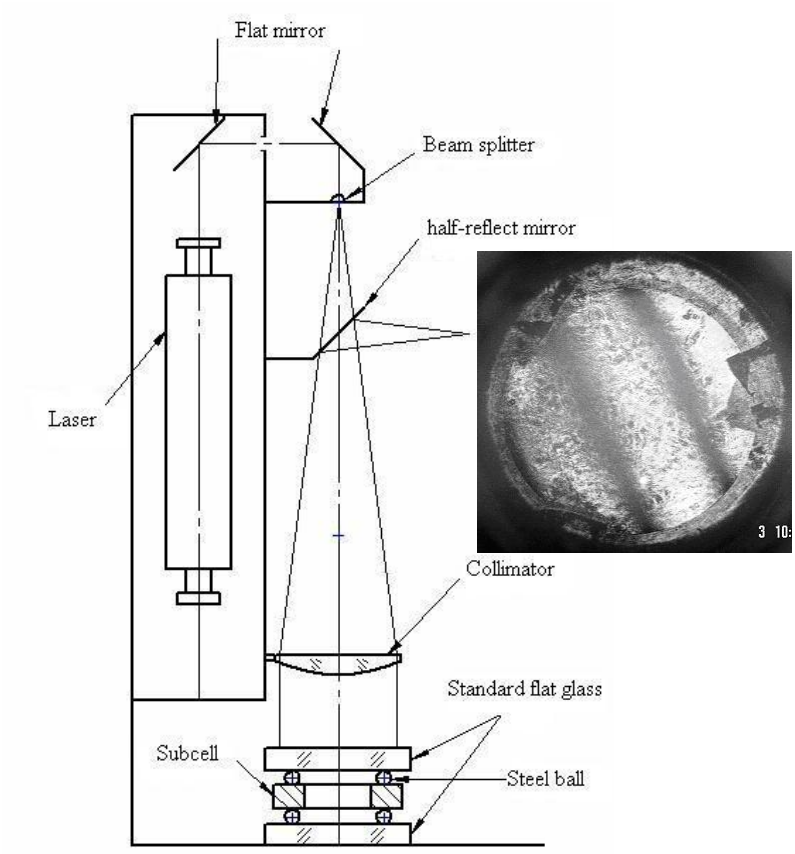

Figure 9: Subcell parallelism testing system and fringe

6. CONCLUSION

By means of precision steel ball positioning, it is possible to meet the decentering error of lens calibration in Space Solar Telescope. And also precision steel balls can be utilized to test parallelism of subcell quickly. So the decentering and tilting error can be fulfilled respectively. When all five subcells bonded with those corresponding lenses are assembled together, the collimating lens can get good imaging quality.

REFERENCES

1. Robert E. Hopkins, *Some thoughts on lens mounting*, Optical Engineering, 15, 428-430, 1976.
2. Mete Bayer, *Lens barrel optomechanical design principles*, Optical Engineering, 22, 181-186, 1981.
3. Anees Ahmad, *Handbook of Optomechanical Engineering*, CRC Press, 1997.
4. Tina M. Valente, Ralph M. Richard, *Interference fit equations for lens cell design using elastomeric lens mountings*, Optical Engineering, 33, 1223-1228, 1994.
5. Daniel Malacara, *Optical Shop Testing*, John Wiley & Sons, 1978.
6. Rudolf Kingslake, *Applied Optics and Optical Engineering*, Academic Press, New York and London, 1965.