Design and Analysis of Support System of LAMOST Primary Mirror

Xuefei Gong*, Xiangqun Cui, Haiyuan Chen, Xizhang Ye and Ru Zhang
Nanjing Institute of Astronomical Optics & Technology/
National Astronomical Observatories of CAS

ABSTRACT

LAMOST (The Large Sky Area Multi-object Fiber Spectroscopic Telescope) is a reflecting Schmidt telescope. There are two large segmented mirrors in LAMOST: One is the Schmidt plate M_A, and the other is the spherical primary mirror M_B. The dimension of M_B is about 6.7m×6m and it is face down in 25°. M_B is composed of 37 hexagonal sub-mirrors. During the observation, one should maintain the correct mirror figure for each sub-mirror and co-focus for all 37 sub-mirrors to obtain the good image, even it is an unconventional designed telescope without tracking movement on the primary mirror. This paper presents the design and the finite element analysis for the whole primary mirror support system, which includes the optimization of the mirror support points distribution, the design and the testing of the prototype of M_B sub-cell, the structure analysis and the design of the mirror support truss.

Keywords: Astronomical Telescope, Mirror support system, Mirror Cell, Finite Element Analysis

1. INTRODUCTION

LAMOST is a meridian reflecting Schmidt telescope laid down on the ground with its optical axis fixed in the meridian plane[1]. It consists of a reflecting Schmidt corrector M_A at the northern end, a spherical primary mirror M_B at the southern end and a focal plane in between. Both the primary mirror and the focal plane are fixed on their ground bases. The reflecting corrector, as a coelostat, tracks the motion of celestial objects. Without the drive mechanism, the primary mirror M_B includes mainly three parts (Fig. 1). First part is 37 hexagonal sub-mirrors and each of them is 1.1m across the diagonal and 75mm in thickness, second part is sub-cell and the third is support truss. In order to get good image quality, each sub-mirror should be supported properly and all of them should maintain correct position. Accordingly, the technique of segmented mirror active optics is to be used. In this paper, we introduce analysis of position of mirror support point, design of sub-cell and analysis of support truss.

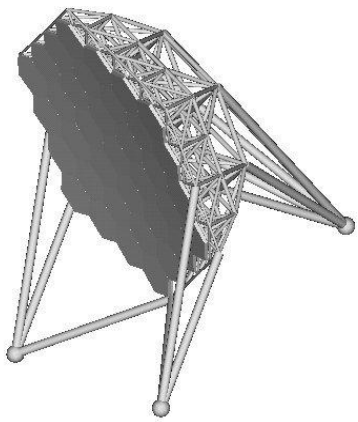

Figure 1. The overview of M_B

* xfgong@nairc.ac.cn; phone 86 25 5405562; fax 86 25 5405562; Nanjing Institute of Astronomical Optics and Technology/ National Astronomical Observatories, Chinese Academy of Sciences, 188 Bancang St., Nanjing 210042, P. R. China

2. FINITE ELEMENT ANALYSIS OF SUB-MIRROR

Front surface of sub-mirror is spherical and the back is flat. All of them are made of ZERODUR and will be grinded and polished by foreign companies. Requirements for the optical surface working accuracy is shown as below:

Deviation from the required spherical surface PTV≤ 41nm RMS≤ 8nm

So support accuracy should be better than this. The ratio of diameter-to-thickness of sub-mirror is 15 to 1. Compared with traditional mirror, it is quite flexible. In order to support mirror in a telescope, many methods have been built such as counterweight systems, hydraulic or pneumatic pressurized flotation pads[2]. In our design, we select whiffletrees as the axial support system because they are kinematical, lightweight and compact. Based on common point support

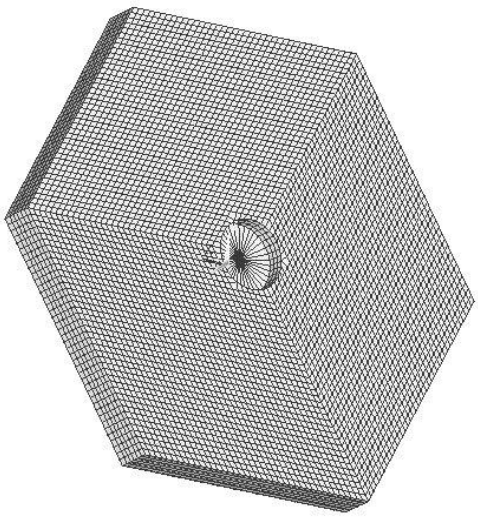

Figure 2. Finite element model of sub-mirror

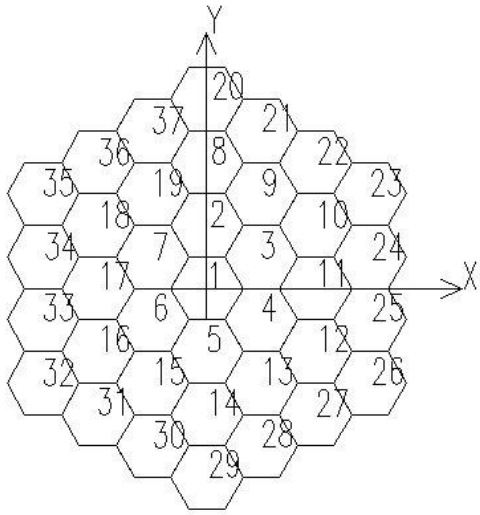

Figure 3. Serial number of M_B

Table 1. Deformations of 37 sub-mirrors in axial direction Z unit: nm

	2	3	4	5	6	7	8	9	10
PTV	25.78	25.93	26.23	26.36	26.22	25.93	25.47	25.63	25.78
RMS	3.19	3.15	3.08	3.05	3.08	3.15	3.26	3.22	3.18

	11	12	13	14	15	16	17	18	19
PTV	26.08	26.36	26.50	26.63	26.50	26.36	26.08	25.78	25.63
RMS	3.11	3.04	3.01	2.98	3.01	3.04	3.11	3.18	3.22

	20	21	22	23	24	25	26	27	28
PTV	25.14	25.31	25.47	25.63	25.93	26.23	26.50	26.63	26.76
RMS	3.33	3.29	3.26	3.22	3.15	3.08	3.01	2.98	2.94

	29	30	31	32	33	34	35	36	37
PTV	26.89	26.76	26.63	26.50	26.33	26.09	25.82	25.47	25.31
RMS	2.91	2.94	2.98	3.01	3.08	3.15	3.22	3.26	3.29

methods, 18 points supports can meet our mirror figure requirement for every sub-mirror. A center-hole is used for the center lateral support system on each sub-mirror. The lateral support point is located at the center of gravity of the sub-mirror so there are not overturning moment. Aided by finite element software, we construct the model of sub-mirror (Fig. 2). It includes 28368 solid elements and several shell elements. In order to find best position of support points, some optimization work was done. Finally, we obtain position of 18 support points and the gravitational deformation of mirror. Since the primary mirror is a spherical surface, 37 sub-mirrors have different tilt angle to fit it[3], so deformations are slightly different. The deformations of the central sub-mirror No.1 are PTV 26.08nm and RMS 3.12nm (Fig. 4). Through Fig. 3 and Tab. 1, we give the results of analysis of other sub-mirrors.

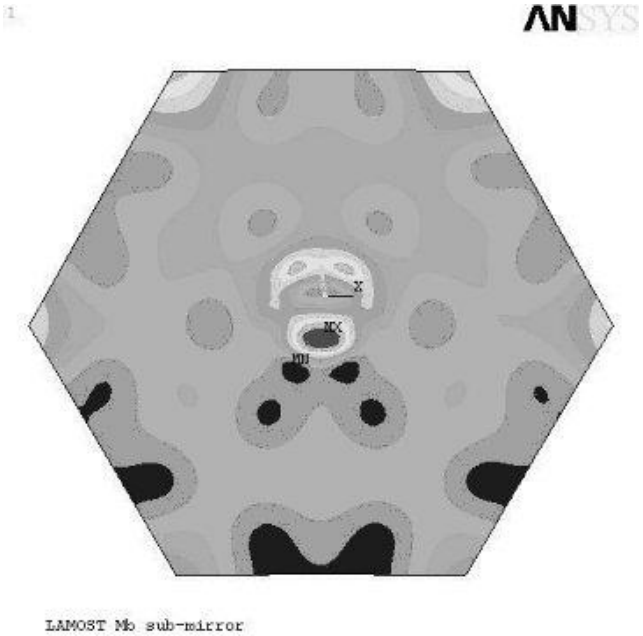

Figure 4. The normal deformation contour of central sub-mirror

Obviously, the results are symmetrical about axes of Y (Table 1), and the mirror figure errors are approximately same when sub-mirrors are approximately at the horizontal line such as No.3, 7, 24 and 34 sub-mirrors (but the errors in plane are different) due to the symmetrical of its gravitational load. All of them can meet our requirement.

The above results were calculated in ideal state. In fact, the deformation may be more than them because of errors of manufacture and install of sub-cell. Aiming at some typical situations, we analysis tolerances of the mirror figure[4]. For whiffletree, when position of all support points have maximum 0.5mm randomly slight shift, the mirror figure change very little just about RMS 0.1nm, or support force have slight difference such as ±1N on all points, the RMS deformation increase about 1nm but still below error budget. On the other hand, the lateral support should be accurately at center of gravity of mirror with a max 0.5mm shift, at the same time, the elastic force due to the deformation of lateral support should be less than 6N. We should indicate that above results were educed only with one factor such as position, force. In fact, the true tolerance is bigger than them because of collective effect of many factors.

3. MECHANICAL DESIGN OF SUB-CELL PROTOTYPE

The design of Sub-cell should be fine as possible because there are 37 copies. So a prototype is manufactured to find shortcoming of present design. Further, we will also measure sub-mirror figure with support systems to validate analytic results of finite element model.

Sub-cell (Fig.5) consists of six parts: axial support system (whiffletree), lateral support system, anti-rotation mechanism, anti-shake mechanism, anti-drop mechanism and sub-truss.

Whiffletree: Axial support system of sub-mirror. Each whiffletree connects to sub-mirror at six points, and is supported by a position actuator so whole sub-mirror is supported by 18 points along the normal direction. The mechanical design of whiffletree should satisfy several constraints. It should be low mass, steady, durable and especial accurate, i.e., it should apply right force to the back of mirror[5]. We select aluminum to fabricate primary beam (which connects two tripods) and tripod, in the middle of primary beam is single-axis pivots allows the primary beam to rotate in one degree of freedom. Oscillating bearing is used as pivots because it can be purchased expediently, but we are afraid that its sliding friction may induce an off gauge mirror figure. In the experiment of sub-cell prototype we will observe and decide whether it could be replaced by spring plate. Similarly, at the end of primary beam, two tripods are connected with primary beam by oscillating bearing so they can rotate freely. Between tripod and sub-mirror, there are two spherical bearing at each of 18 points to allow the whiffletrees not to put additional stress on the mirror at the points of attachment during the thermal expanding.

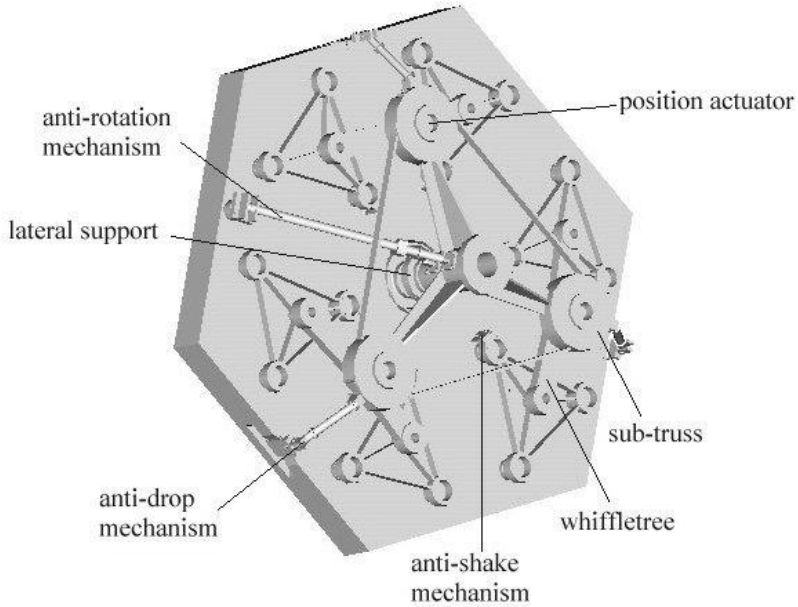

Figure 5. Sub-cell of M_B

Lateral support: Considering M_B declines to ground with 25°, the lateral support undertakes the most of weight of sub-mirror. We design a device that is composed of six invar pads and some diaphragms of steel to provide high radial stiffness. At the same time, it should not interfere axial motion of sub-mirror. Six little invar pads is glued to the center-hole of sub-mirror equably and connect with a steel ring through six little sheet steel, in the steel ring there is a steel diaphragm that is bolted to the end of the lateral support post. The diaphragm is made of high strength steel, it have high stiffness in plane so it can constrains two degrees of freedom of sub-mirror (translation along x and y in-plane), at the same time it is very flexible in normal direction. We select 0.15mm as a preliminary thickness of diaphragm. The lateral support post is connected with the sub-truss by screw at another end of it. During assembling and removal the sub-mirror, it can push in and out the sub-mirror about 200mm.

Anti-rotation mechanism: About 300mm long steel rod attach the outer edge of mirror and sub-truss. It can restrict one degree of freedom (rotation about normal direction) and increases the resonant frequency of whole sub-cell.

Anti-drop mechanism: M_B is different from common primary mirror in its declination. In case all of glued invar pads fail the anti-drop mechanism can prevent the sub-mirror from dropping. Smart design makes it not restrict the tip/tilt and piston of sub-mirror when telescope is working.

Anti-shake mechanism: Whiffletree is kinematical and self-balancing so it will shake during transporting and installing. It can damage the expensive glass mirror and precise machine parts. Just tightening and loosening setscrew in anti-shake mechanism whiffletree can be fixed and freed easily.

Sub-truss: A bridge between whiffletree and primary truss. Lateral support post, anti-rotation rod, anti-drop rod and position actuator are fixed on it. Since it is impossible to manufacture and assemble a precise spherical primary truss, sub-truss is necessary because position actuator can adjust only a small range about ±0.5mm along the axial direction of the sub-mirror. We can adjust position of sub-truss when sub-truss is connected with primary truss, so all of sub-trusses can form a more approximate spherical surface than primary truss to meet requirement of actuator.

Whole weight of above five parts (excluding sub-truss) is about 20Kg, compared to 150Kg for sub-mirror. With the sub-mirror support system, the three degrees of freedom are constrained. When three position actuator move, the sub-mirror only can move in tip/tilt and piston. A prototype of sub-cell will be finished in August this year. As shown in Fig.6, a simple support frame will be manufactured to support the prototype. With it, we can do some experiments to seeing about the performance of sub-cell.

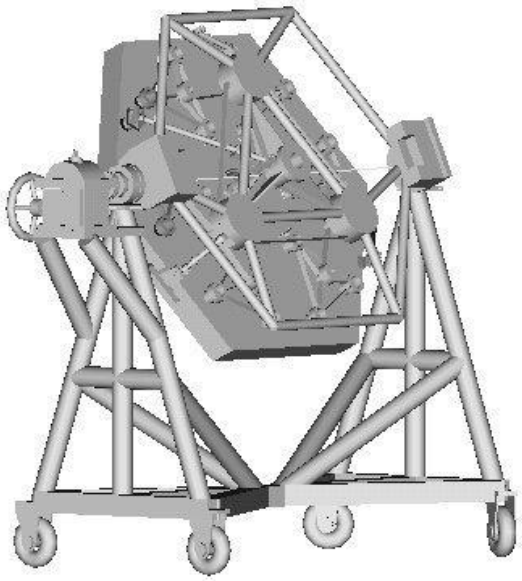

Figure 6. Experimental system of prototype of sub-cell

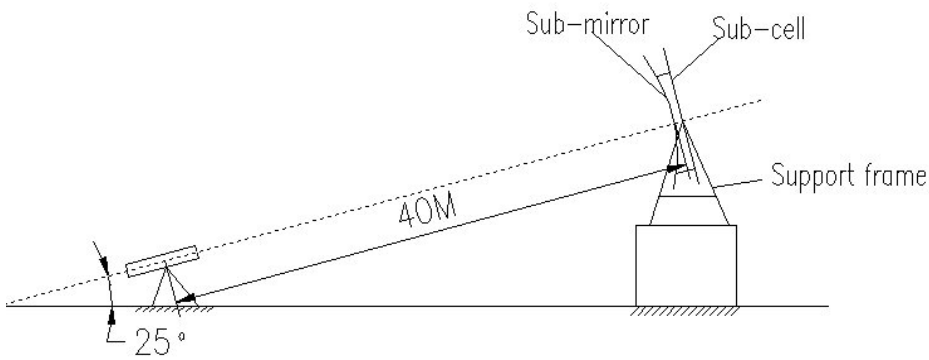

Figure 7. Sketch map of experiment of sub-cell

Because the sub-mirror made of low thermal expanding glass for the experiment can't obtain at present, a sub-mirror made of normal optical glass will be used in the experiment. In preliminary experiment, there are two important problem need to solve. First problem is the thickness of diaphragm of lateral support, the second is precise position of center of gravity of sub-mirror and sub-cell. According to above analysis, the two factors influence sub-mirror figure greatly, we hope to find proper thickness of diaphragm and exact position of center of gravity. With the experiment sub-mirror will be available, some optical measure will be done to observe sub-mirror surface error introduced by the support (Fig. 7). In addition, manufacturability and workable also need to check in this experiment. All of these will help us to improve sub-cell for final design.

Since M_B is facedown in 25° in LAMOST, and fixed when it has been installed and adjusted, how to attached sub-mirror and sub-cell to primary truss is a key point. We can't use talon device to suspend sub-mirror from above because of complicated net of primary truss. When sub-mirror is assembled, firstly, the sub-truss is attached to primary, and then a device like manipulator raises sub-mirror and other five parts of sub-cell to sub-truss from below, finally, through the screw of lateral support post and position actuator they are connected.

4. MODELING AND ANALYSIS OF PRIMARY TRUSS

Spatial truss structure is a popular design for primary mirror support in modern large telescope[6]. In order to support 37 sub-mirrors that each one weighs about 150kg, a three-layered cell is essential. Because of the spherical mirror the top layer of truss should be sphere, and at the same time has nodes at each of the actuator locations. Considering M_B declines to ground with 25°, we think the top layer should be larger than the glass mirror so some support struts can be fixed in front of mirror. Middle and bottom layer is flat so it is convenient to manufacture and assemble. The structure of the whole cell is shown in Fig. 8.

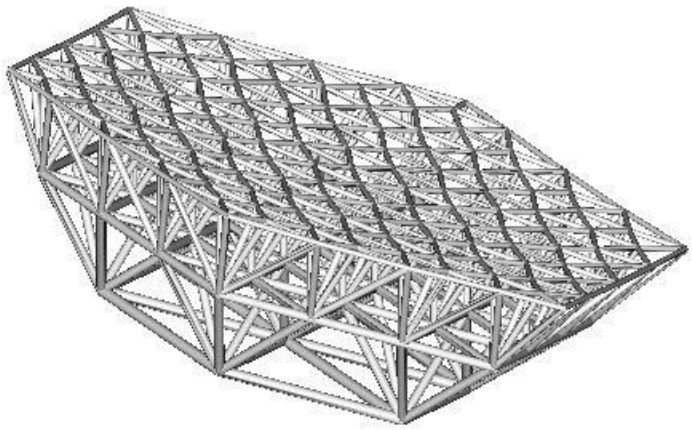

Figure 8. 3D view of primary truss

Considering the manufacturability and economy, all of the struts used steel tube, the joint use bolt or weld. Aided by Finite Element software, we construct finite element model of the cell, support frame and sub-mirror. For optimization, the radius of section for steel tube is defined by parameters. Totally, Five kinds of tube were be used for different layer and diagonal bar and two kinds of tube for support frame. The model of cell and support frame is shown in Fig. 9. The dimension of whole model is about 6.1m×7.7m×6m.

With an initial value of experience, the analysis result of whole support structure is not so good mainly due to low eigenfrequency. Generally, frequencies in a telescope are related to deflections by gravity. Reducing the deformation of gravity can increase the frequency effectively. For decreasing the deformation, we stiffen the steel tube with larger diameter and thickness. The results show that frequency is higher than before but weight also increases greatly. It is inconvenient to transport and costs much money. In order to find a good balance point between higher frequency and

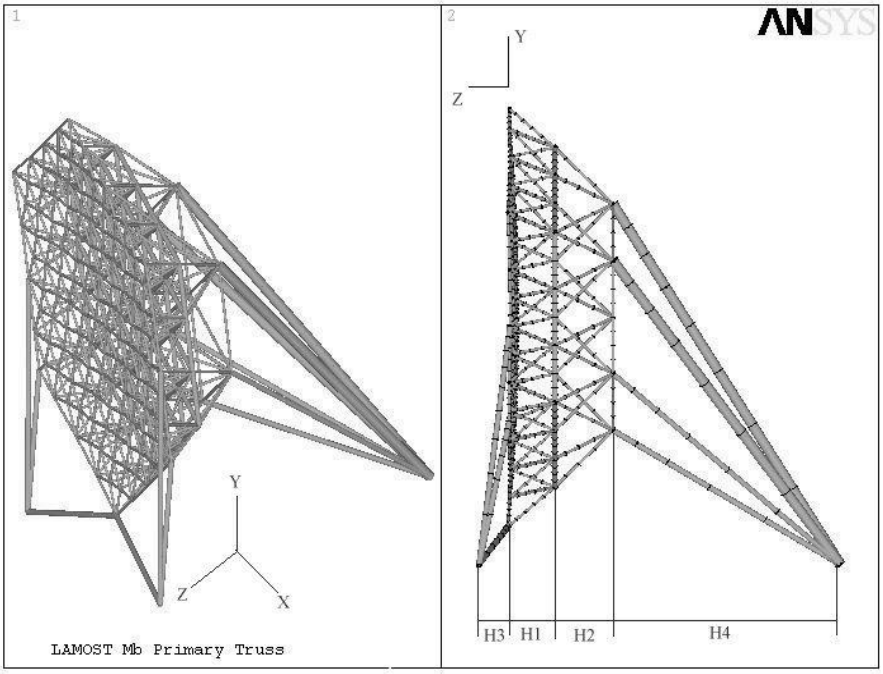

Figure 9. Finite element model of primary truss

Table 2. Frequencies of Eigenmodes 1 to 20

NO.	Frequency (Hz)		NO.	Frequency (Hz)	
	Before modify	After modify		Before modify	After modify
1	12.038	11.987	11	15.594	29.289
2	13.021	13.557	12	19.137	35.263
3	13.306	14.724	13	19.394	37.220
4	14.108	17.573	14	20.126	37.954
5	14.108	19.974	15	23.956	38.104
6	14.150	23.972	16	24.153	38.177
7	14.197	24.153	17	24.929	38.619
8	15.184	24.929	18	24.948	38.732
9	15.301	24.948	19	25.937	39.148
10	15.336	25.895	20	29.003	41.112

lighter weigh, some optimization work was done. As shown in Fig. 9, H1 and H2 are interval between different layers, H3 is interval between front support frame and top layer and H4 is interval between bottom layer and rear support frame. In our optimization PTVZ is defined as peak-valley value of deformation of top layer of primary cell in Z direction, Freq1 is lowest frequency and wt is weigh of truss and mirror. Selecting H1, H2, H, H4 and all constants of steel tube as design variable, Freq1 as state variable, wt as object function, optimization has been done by using the Sub-problem approximation with initial Random Generation method, which is a zero-order approximation and does not need derivative. We restrict Freq1 larger than 12Hz. After optimization the frequency descends very little while the weight reduces rapidly.

With the above results, we can analyze the mode of vibration of support structure. The exact eigenmodes are calculated with Block Lanczos method[7]. With an initial calculation, we find the rear support frame is the weakest part, so reinforce it with some poles. Table 2 is the general comparison of frequencies between new and old models with their modes 1 to 20.

5. CONCLUSIONS AND PROSPECT

On the basis of above work, we have elementary scheme for whole M_B including sub-mirror, sub-cell and support truss. Although the result of analysis seems to be satisfactory, we think several works should be done further:

A more exact model of sub-mirror should be construct including center-hole mechanism to more approximately evaluate mirror figure errors of support.

During prototype experiment, the sub-cell should be improved for higher stiffness.

From the view of manufacture, the support frame should be improved until it is not only stable but also workable. In addition, at the bottom of it should have some devices to meet need of optical adjust for accurate focal length and dip.

Considering seismic at the telescope site and wind load in the doom, some dynamic analysis should be done to evaluate hazard.

With the further design of sub-mirror support system and primary truss, an integrated model of M_B should be built which includes the sub-mirror and support system, sub-cell, primary truss and support frame. Analysis should be redone with this detailed model.

REFERENCES

1. Ding-qiang Su, Xiangqun Cui, Ya-nan Wang and Zhengqiu Yao, “Large Sky Area Multi-object Fiber Spectroscopic Telescope (LAMOST) and its key technology”, *Advanced Technology Optical/IR Telescopes VI*, ed. by L. M. Stepp, SPIE Vol. **3352,** pp. 76-90, 1998.
2. Xiangqun Cui, “Passive Support System of Optical Mirror In LAMOST”, *LAMOST Feasibility Study Report*, 1996.
3. Han-liang Chen, “Building the M_B Array of segments of LAMOST and Calculating Their Directions”, *ACTA ASTROPHYSICA SINICA*, Vol.**20**, Supplement, 2000.
4. Xuefei Gong, Xiangqun Cui, Haiyuan Chen, “Segment-mirror Support Analysis of LAMOST M_B”, LAMOST Technique Report No. L3-022, 2001.
5. Keck Observatory Report No. 90, “The Design of the Keck Observatory and Telescope”, January 1985.
6. Victor L. Krabbendam, Thomas A. Sebring, Frank B. Ray, James R. Fowler, “Development and Performance of Hobby Eberly Telescope 11 Meter Segmented Mirror”, *Advanced Technology Optical/IR Telescopes VI*, ed. by L. M. Stepp, SPIE Vol. **3352** pp. 436-445, 1998.
7. ANSYS Dynamic Analysis Guide, ed. by Ansys China, 1998.